STATE OF CALIFORNIA

CALIFORNIA NATURAL RESOURCES AGENCY

DEPARTMENT OF WATER RESOURCES

DIVISION OF ENGINEERING

STATE WATER FACILITIES

LOCATION MAP

DROUGHT EMERGENCY - TEMPORARY ROCK BARRIERS

SUTTER SLOUGH, STEAMBOAT SLOUGH AND WEST FALSE RIVER - SACRAMENTO RIVER DELTA

SPECIFICATION NO. 14-11

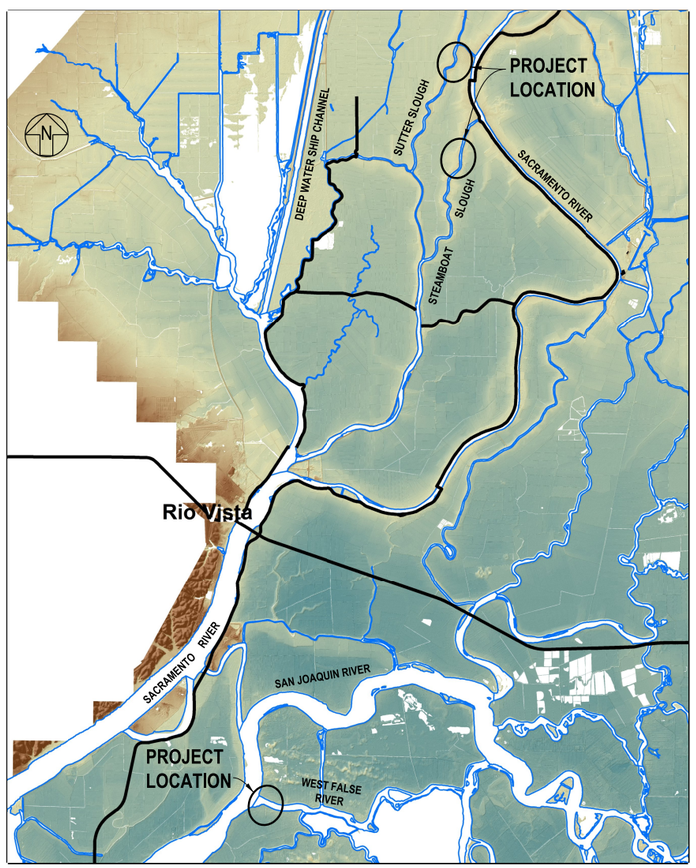

LOCATION MAP

LIST OF DRAWINGS

SHEET NO.	DRAWING NO.	DRAWING TITLE
001	G-101	COVER SHEET, LOCATION MAP AND LIST OF DRAWINGS
002	C-201	GENERAL PLAN
003	C-202	SUTTER SLOUGH - GENERAL PLAN
004	C-203	SUTTER SLOUGH - SITE PLAN
005	C-204	SUTTER SLOUGH - PROFILE AND SECTIONS
006	C-205	STEAMBOAT SLOUGH - GENERAL PLAN
007	C-206	STEAMBOAT SLOUGH - SITE PLAN
008	C-207	STEAMBOAT SLOUGH - PROFILES
009	C-208	STEAMBOAT SLOUGH - SECTIONS
010	C-209	WEST FALSE RIVER - GENERAL PLAN
011	C-210	WEST FALSE RIVER - SITE PLAN AND PROFILE
012	C-211	WEST FALSE RIVER - DETAILS AND SECTION
013	C-212	WEST FALSE RIVER - DETAILS 2
014	C-213	TYPICAL CULVERT PLAN AND SECTIONS
015	C-214	STANDARD FENCING DETAILS - 8' CHAIN LINK WITH BARBED WIRE

PRELIMINARY - SUBJECT TO REVISIONS

STATE OF CALIFORNIA
CALIFORNIA NATURAL RESOURCES AGENCY
DEPARTMENT OF WATER RESOURCES
DIVISION OF ENGINEERING
STATE WATER FACILITIES

REV.	DESCRIPTION	SUB.	APP.

THINK SAFETY - ACT SAFELY

APPROVED: DATE:

CHIEF, DIVISION OF ENGINEERING, REG. C.E. No. 52771

SPEC. NO.	SHEET NO.	REVISION	DRAWING NO.
14-11	001		G-101

V= Plot.BW.11x17.PEN
4/1/2014

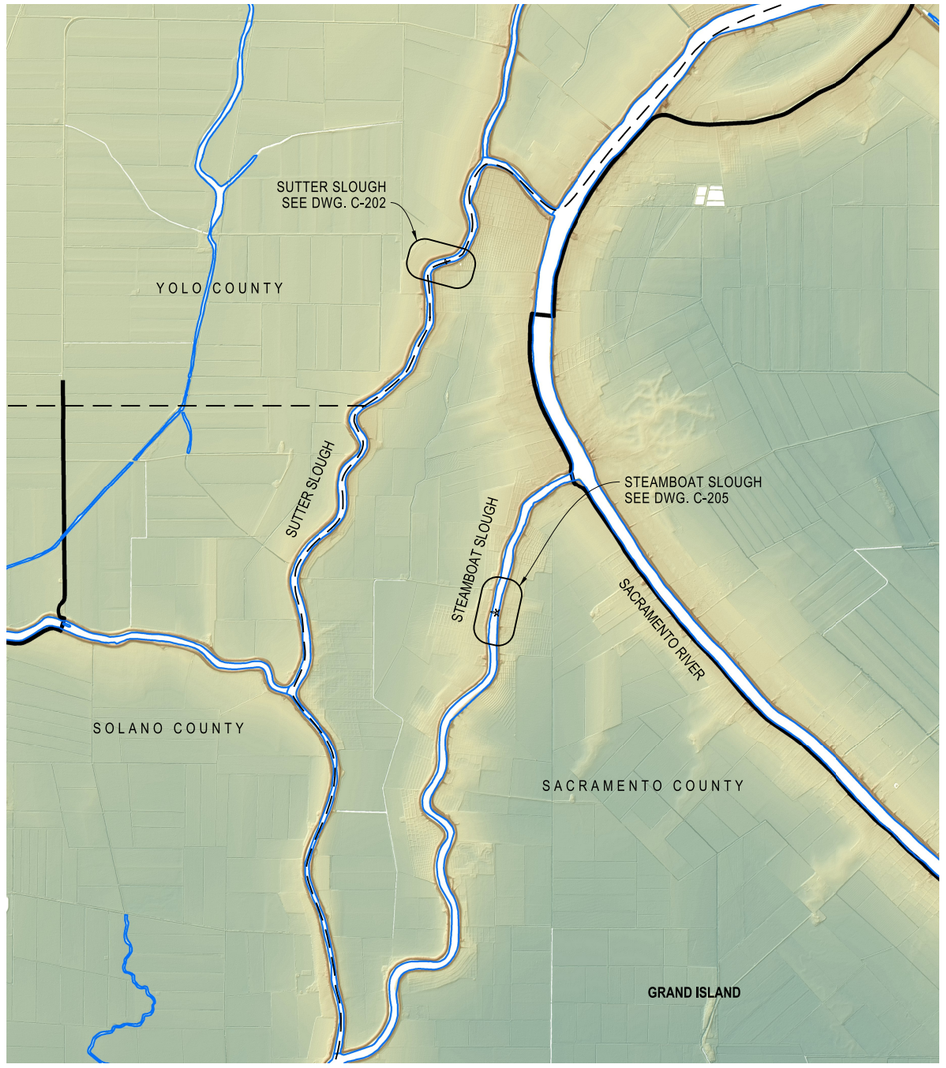

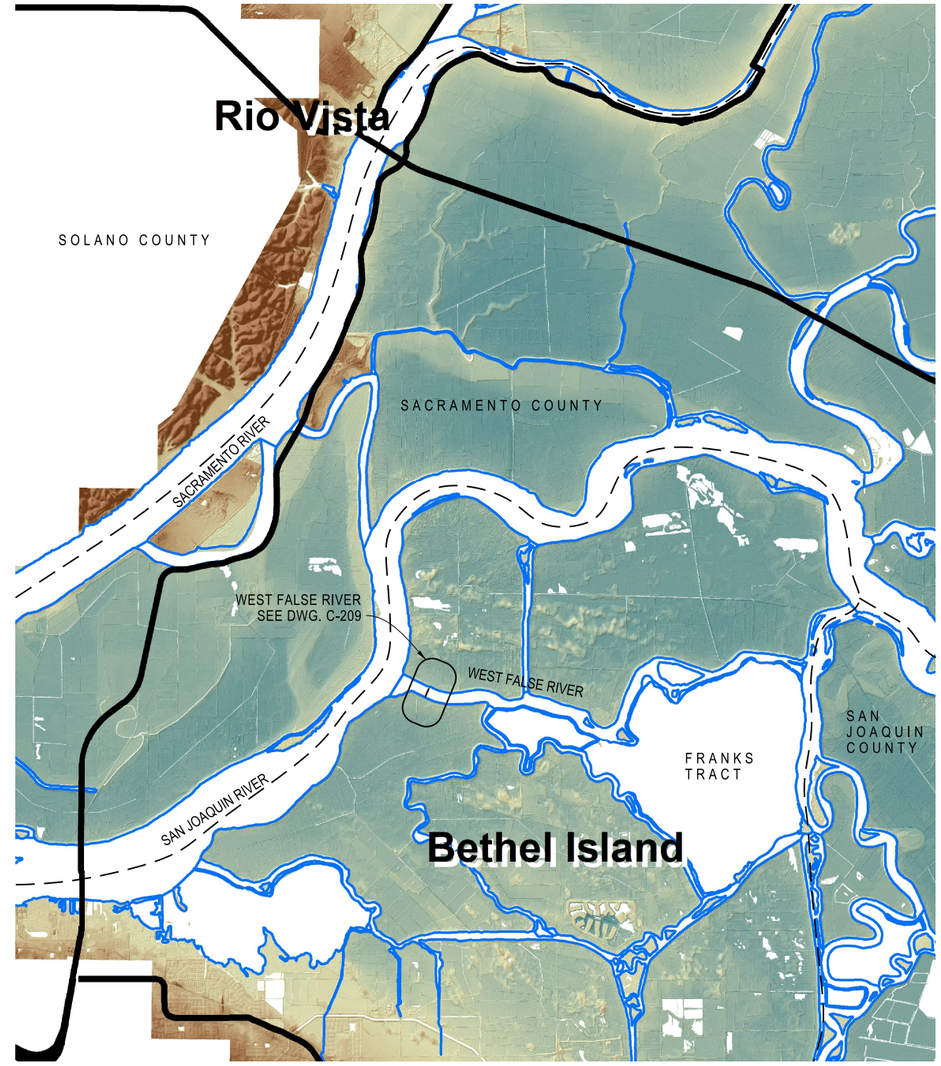

GENERAL PLAN

NOT TO SCALE

PRELIMINARY - SUBJECT TO REVISIONS

STATE OF CALIFORNIA
CALIFORNIA NATURAL RESOURCES AGENCY
DEPARTMENT OF WATER RESOURCES
DIVISION OF ENGINEERING
STATE WATER FACILITIES

REV.	DESCRIPTION	SUB.	APP.

REGISTERED PROFESSIONAL ENGINEER JAMES M. LOPES No. 62184 Exp. 9-30-15 CIVIL STATE OF CALIFORNIA

DESIGNED:	CHECKED:
Anna B. Gutierrez REG. C.E. No. 72270	Nathan W. Smith REG. C.E. No. 78185
DRAWN:	REVIEWED:
Anna B. Gutierrez REG. C.E. No. 72270	James M. Lopes REG. C.E. No. 62184

SUBMITTED:
James M. Lopes
REG. C.E. No. 62184

APPROVAL RECOMMENDED: DATE:

CHIEF, GENERAL ENGINEERING SECTION, REG. C.E. No. 55947

APPROVED: DATE:

CHIEF, DELTA ENGINEERING BRANCH, REG. C.E. No. 47259

THINK SAFETY - ACT SAFELY

STATE WATER FACILITIES

DROUGHT EMERGENCY TEMPORARY ROCK BARRIERS

SUTTER SLOUGH, STEAMBOAT SLOUGH, AND WEST FALSE RIVER

GENERAL PLAN

SPEC. NO.	SHEET NO.	REVISION	DRAWING NO.
14-11	002		C-201

V= Plot,BW,11x17,PEN
4/1/2014

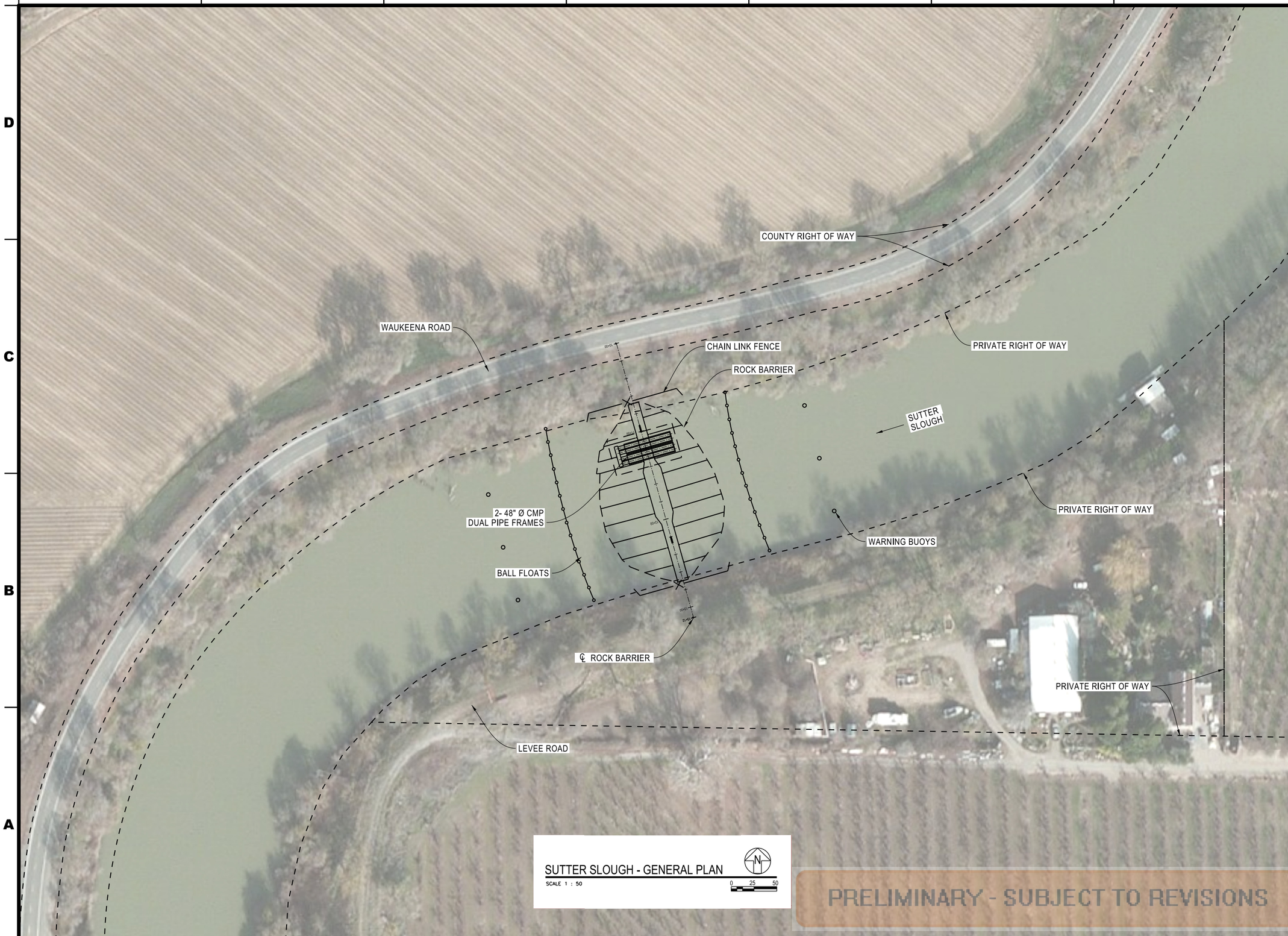

STATE OF CALIFORNIA
CALIFORNIA NATURAL RESOURCES AGENCY
DEPARTMENT OF WATER RESOURCES
DIVISION OF ENGINEERING
STATE WATER FACILITIES

REV.	DESCRIPTION	SUB.	APP.

REGISTERED PROFESSIONAL ENGINEER JAMES M. LOPES No. 62184 Exp. 9-30-15 CIVIL STATE OF CALIFORNIA

DESIGNED:	CHECKED:
Anna B. Gutierrez REG. C.E. No. 72270	Nathan W. Smith REG. C.E. No. 78185
DRAWN:	REVIEWED:
Anna B. Gutierrez REG. C.E. No. 72270	James M. Lopes REG. C.E. No. 62184

SUBMITTED:
James M. Lopes
REG. C.E. No. 62184

APPROVAL RECOMMENDED: DATE:

CHIEF, GENERAL ENGINEERING SECTION, REG. C.E. No. 55947

APPROVED: DATE:

CHIEF, DELTA ENGINEERING BRANCH, REG. C.E. No. 47259

THINK SAFETY - ACT SAFELY

STATE WATER FACILITIES

DROUGHT EMERGENCY
TEMPORARY ROCK BARRIERS

SUTTER SLOUGH, STEAMBOAT SLOUGH, AND WEST FALSE RIVER

SUTTER SLOUGH

GENERAL PLAN

SPEC. NO.	SHEET NO.	REVISION	DRAWING NO.
14-11	003		C-202

V# Plot,BW,11x17,PEN
4/1/2014

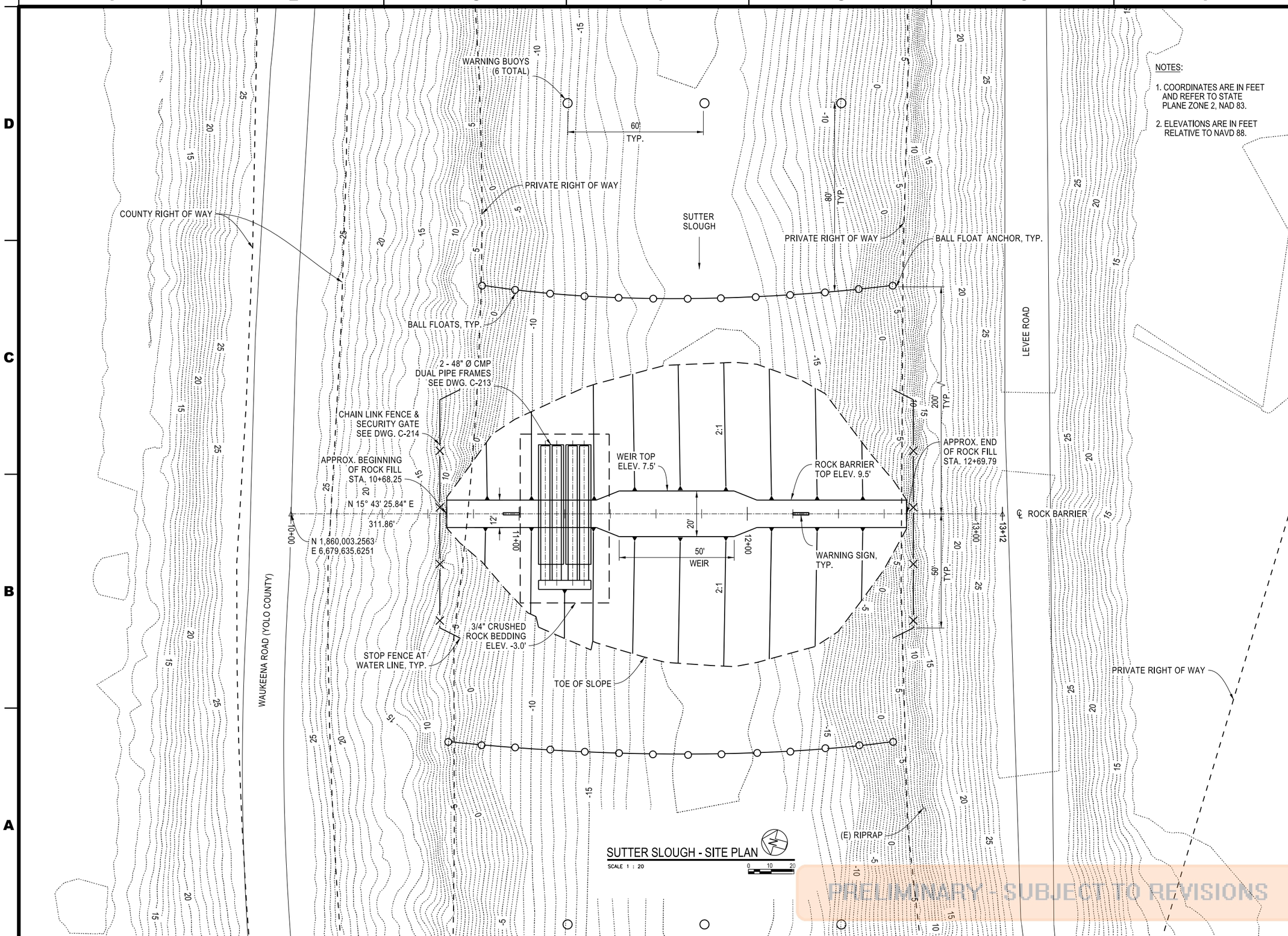

SUTTER SLOUGH - SITE PLAN

SCALE 1 : 20

PRELIMINARY - SUBJECT TO REVISIONS

NOTES:

1. COORDINATES ARE IN FEET AND REFER TO STATE PLANE ZONE 2, NAD 83.
2. ELEVATIONS ARE IN FEET RELATIVE TO NAVD 88.

STATE OF CALIFORNIA
CALIFORNIA NATURAL RESOURCES AGENCY
DEPARTMENT OF WATER RESOURCES
DIVISION OF ENGINEERING
STATE WATER FACILITIES

REV.	DESCRIPTION	SUB.	APP.

REGISTERED PROFESSIONAL ENGINEER JAMES M. LOPES No. 62184 Exp. 9-30-15 CIVIL STATE OF CALIFORNIA

DESIGNED:	CHECKED:
Anna B. Gutierrez REG. C.E. No. 72270	Nathan W. Smith REG. C.E. No. 78185
DRAWN:	REVIEWED:
Anna B. Gutierrez REG. C.E. No. 72270	James M. Lopes REG. C.E. No. 62184

SUBMITTED:
James M. Lopes
REG. C.E. No. 62184

APPROVAL RECOMMENDED: DATE:

CHIEF, GENERAL ENGINEERING SECTION, REG. C.E. No. 55947

APPROVED: DATE:

CHIEF, DELTA ENGINEERING BRANCH, REG. C.E. No. 47259

THINK SAFETY - ACT SAFELY

STATE WATER FACILITIES

DROUGHT EMERGENCY TEMPORARY ROCK BARRIERS

SUTTER SLOUGH, STEAMBOAT SLOUGH, AND WEST FALSE RIVER

SUTTER SLOUGH

SITE PLAN

SPEC. NO.	SHEET NO.	REVISION	DRAWING NO.
14-11	004		C-203

V:\ Plot.BW.11x17.PEN
4/1/2014

NOTES:

1. ELEVATIONS ARE IN FEET RELATIVE TO NAVD 88.

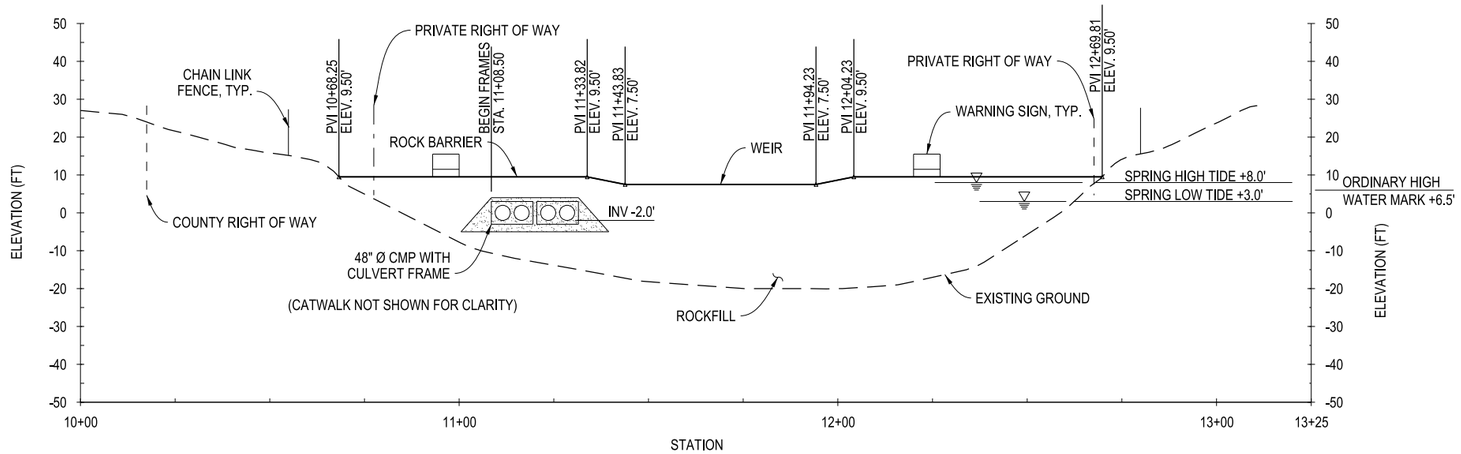

PROFILE

SCALE 1 : 20

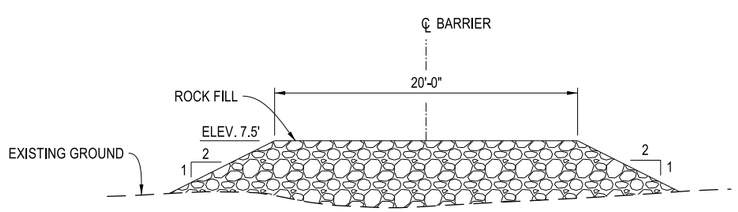

TYPICAL WEIR SECTION

NOT TO SCALE

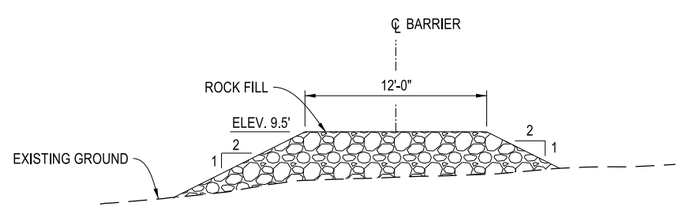

TYPICAL BARRIER SECTION

NOT TO SCALE

PRELIMINARY - SUBJECT TO REVISIONS

STATE OF CALIFORNIA
CALIFORNIA NATURAL RESOURCES AGENCY
DEPARTMENT OF WATER RESOURCES
DIVISION OF ENGINEERING
STATE WATER FACILITIES

REV.	DESCRIPTION	SUB.	APP.

REGISTERED PROFESSIONAL ENGINEER JAMES M. LOPES No. 62184 Exp. 9-30-15 CIVIL STATE OF CALIFORNIA

DESIGNED:	CHECKED:
Anna B. Gutierrez REG. C.E. No. 72270	Nathan W. Smith REG. C.E. No. 78185
DRAWN:	REVIEWED:
Anna B. Gutierrez REG. C.E. No. 72270	James M. Lopes REG. C.E. No. 62184

SUBMITTED:
James M. Lopes
REG. C.E. No. 62184

APPROVAL RECOMMENDED: DATE:

CHIEF, GENERAL ENGINEERING SECTION, REG. C.E. No. 55947

APPROVED: DATE:

CHIEF, DELTA ENGINEERING BRANCH, REG. C.E. No. 47259

THINK SAFETY - ACT SAFELY

STATE WATER FACILITIES

DROUGHT EMERGENCY TEMPORARY ROCK BARRIERS

SUTTER SLOUGH, STEAMBOAT SLOUGH, AND WEST FALSE RIVER

SUTTER SLOUGH

PROFILE AND SECTIONS

SPEC. NO.	SHEET NO.	REVISION	DRAWING NO.
14-11	005		C-204

V= Plot,BW,11x17,PEN
4/1/2014

STATE OF CALIFORNIA
CALIFORNIA NATURAL RESOURCES AGENCY
DEPARTMENT OF WATER RESOURCES
DIVISION OF ENGINEERING
STATE WATER FACILITIES

REV.	DESCRIPTION	SUB.	APP.

REGISTERED PROFESSIONAL ENGINEER JAMES M. LOPES No. 62184 Exp. 9-30-15 CIVIL STATE OF CALIFORNIA

DESIGNED:	CHECKED:
Nathan W. Smith REG. C.E. No. 78185	Anna B. Gutierrez REG. C.E. No. 72270
DRAWN:	REVIEWED:
Nathan W. Smith REG. C.E. No. 78185	James M. Lopes REG. C.E. No. 62184

SUBMITTED:
James M. Lopes
REG. C.E. No. 62184

APPROVAL RECOMMENDED: DATE:
CHIEF, GENERAL ENGINEERING SECTION, REG. C.E. No. 55947

APPROVED: DATE:
CHIEF, DELTA ENGINEERING BRANCH, REG. C.E. No. 47259

THINK SAFETY - ACT SAFELY

STATE WATER FACILITIES

DROUGHT EMERGENCY
TEMPORARY ROCK BARRIERS

SUTTER SLOUGH, STEAMBOAT SLOUGH, AND WEST FALSE RIVER

STEAMBOAT SLOUGH

GENERAL PLAN

SPEC. NO.	SHEET NO.	REVISION	DRAWING NO.
14-11	006		C-205

V: Plot,BW,11x17,PEN
4/1/2014

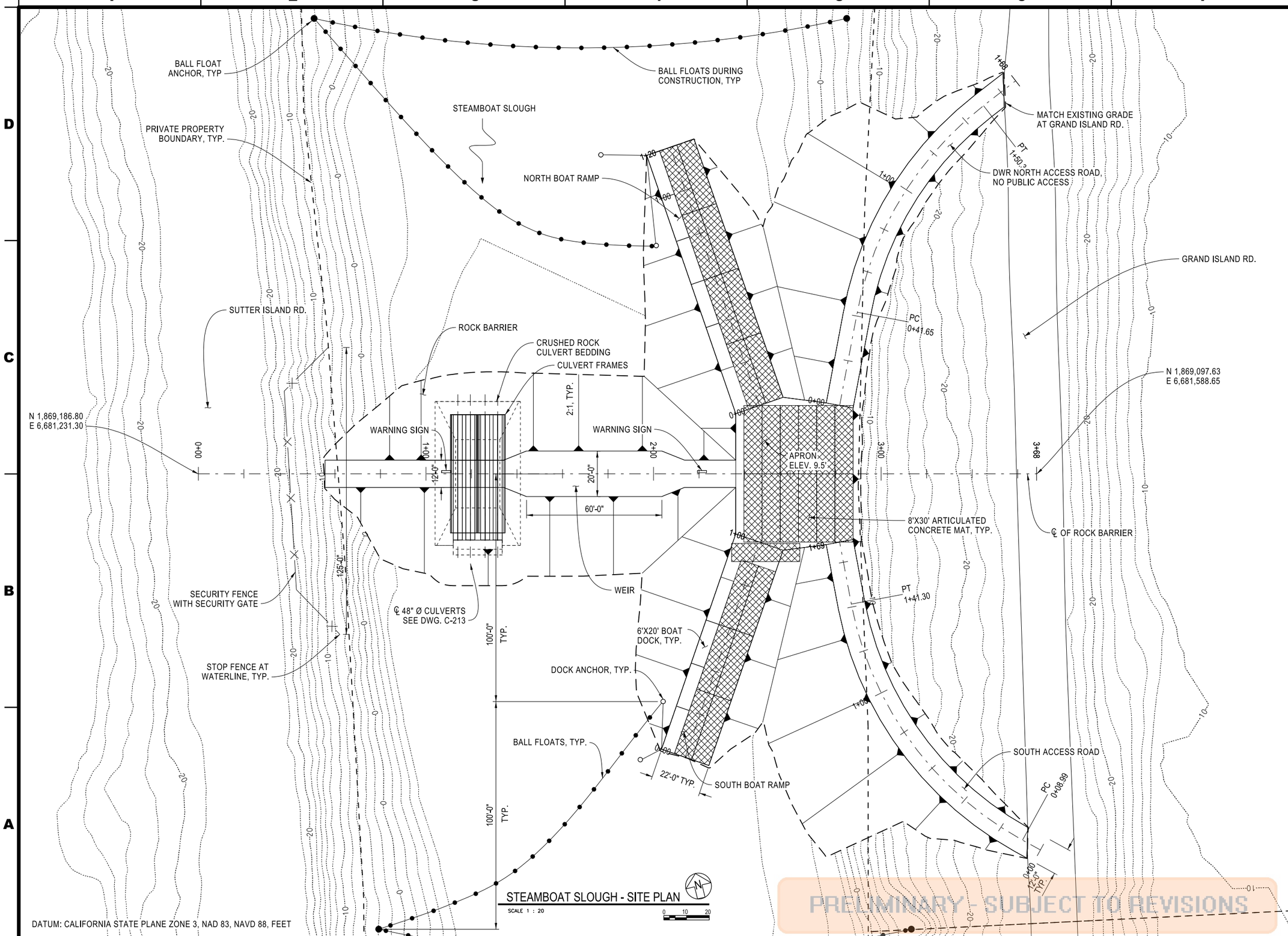

STEAMBOAT SLOUGH - SITE PLAN

SCALE 1 : 20

STATE OF CALIFORNIA
CALIFORNIA NATURAL RESOURCES AGENCY
DEPARTMENT OF WATER RESOURCES
DIVISION OF ENGINEERING
STATE WATER FACILITIES

REV.	DESCRIPTION	SUB.	APP.

REGISTERED PROFESSIONAL ENGINEER JAMES M. LOPES No. 62184 Exp. 9-30-15 CIVIL STATE OF CALIFORNIA

DESIGNED:	CHECKED:
Nathan W. Smith REG. C.E. No. 78185	Anna B. Gutierrez REG. C.E. No. 72270
DRAWN:	REVIEWED:
Nathan W. Smith REG. C.E. No. 78185	James M. Lopes REG. C.E. No. 62184

SUBMITTED:
James M. Lopes
REG. C.E. No. 62184

APPROVAL RECOMMENDED: DATE:

CHIEF, GENERAL ENGINEERING SECTION, REG. C.E. No. 55947

APPROVED: DATE:

CHIEF, DELTA ENGINEERING BRANCH, REG. C.E. No. 47259

THINK SAFETY - ACT SAFELY

STATE WATER FACILITIES

DROUGHT EMERGENCY TEMPORARY ROCK BARRIERS

SUTTER SLOUGH, STEAMBOAT SLOUGH, AND WEST FALSE RIVER

STEAMBOAT SLOUGH

SITE PLAN

SPEC. NO.	SHEET NO.	REVISION	DRAWING NO.
14-11	007		C-206

V:\ Plot.BW.11x17.PEN
4/1/2014

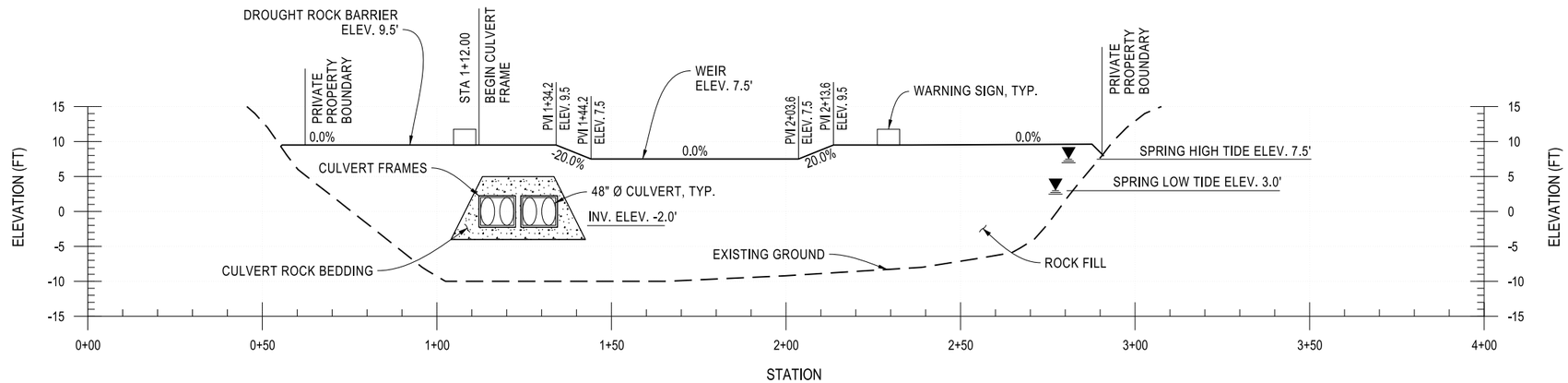

ROCK BARRIER PROFILE

HORIZONTAL 0 20 40 VERTICAL 0 10 20

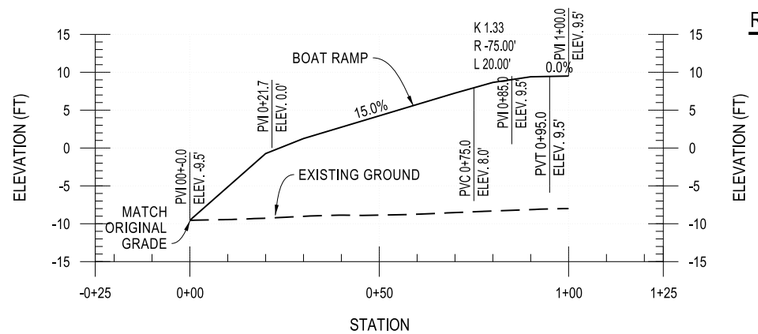

SOUTH BOAT RAMP PROFILE

HORIZONTAL 0 20 40 VERTICAL 0 10 20

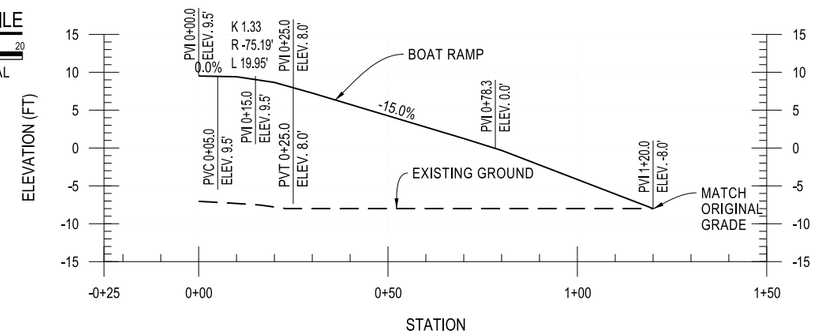

NORTH BOAT RAMP PROFILE

HORIZONTAL 0 20 40 VERTICAL 0 10 20

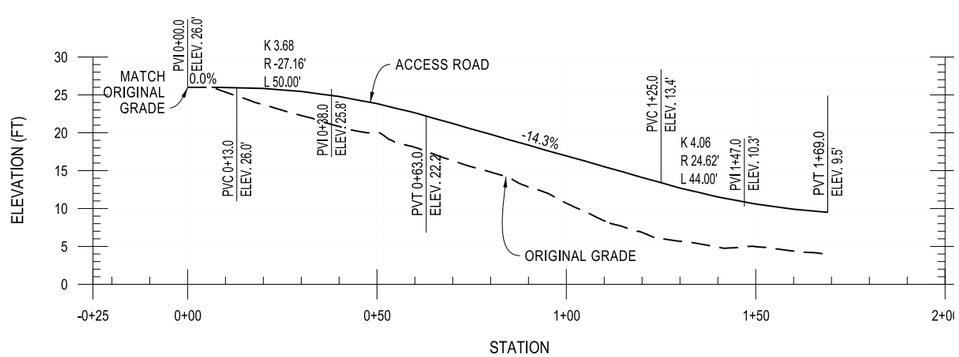

SOUTH ACCESS ROAD PROFILE

HORIZONTAL 0 20 40 VERTICAL 0 10 20

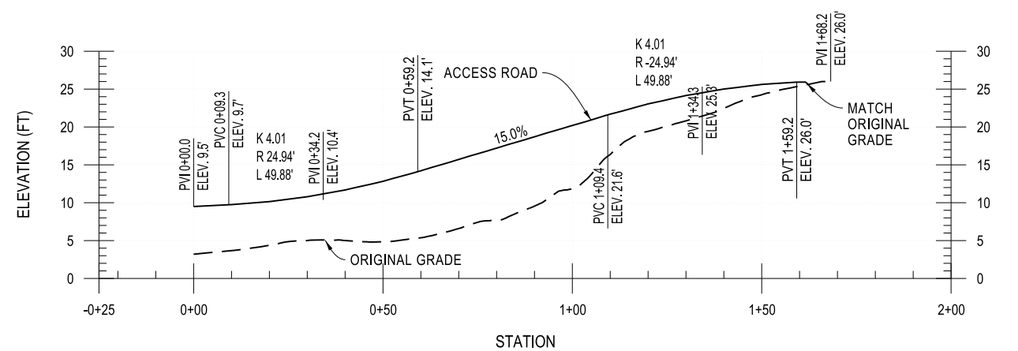

NORTH ACCESS ROAD PROFILE

HORIZONTAL 0 20 40 VERTICAL 0 10 20

PRELIMINARY - SUBJECT TO REVISIONS

DATUM: CALIFORNIA STATE PLANE ZONE 3, NAD 83, NAVD 88, FEET

STATE OF CALIFORNIA
CALIFORNIA NATURAL RESOURCES AGENCY
DEPARTMENT OF WATER RESOURCES
DIVISION OF ENGINEERING
STATE WATER FACILITIES

REV.	DESCRIPTION	SUB.	APP.

REGISTERED PROFESSIONAL ENGINEER JAMES M. LOPES No. 62184 Exp. 9-30-15 CIVIL STATE OF CALIFORNIA

DESIGNED:	CHECKED:
Nathan W. Smith REG. C.E. No. 78185	Anna B. Gutierrez REG. C.E. No. 72270
DRAWN:	REVIEWED:
Nathan W. Smith REG. C.E. No. 78185	James M. Lopes REG. C.E. No. 62184

SUBMITTED:
James M. Lopes
REG. C.E. No. 62184

APPROVAL RECOMMENDED: DATE:
CHIEF, GENERAL ENGINEERING SECTION, REG. C.E. No. 55947

APPROVED: DATE:
CHIEF, DELTA ENGINEERING BRANCH, REG. C.E. No. 47259

THINK SAFETY - ACT SAFELY

STATE WATER FACILITIES

DROUGHT EMERGENCY TEMPORARY ROCK BARRIERS

SUTTER SLOUGH, STEAMBOAT SLOUGH, AND WEST FALSE RIVER

STEAMBOAT SLOUGH

PROFILES

SPEC. NO.	SHEET NO.	REVISION	DRAWING NO.
14-11	008		C-207

V= Plot.BW.11x17.PEN
4/1/2014

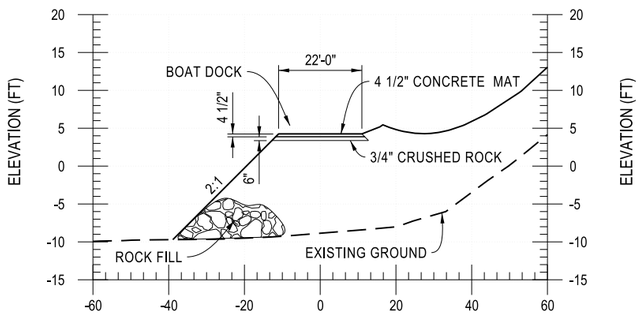

TYPICAL BOAT RAMP CROSS SECTION

HORIZONTAL VERTICAL

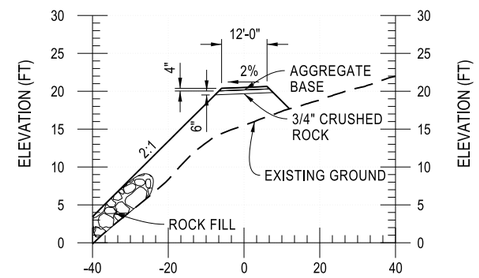

TYPICAL ACCESS ROAD CROSS SECTION

HORIZONTAL VERTICAL

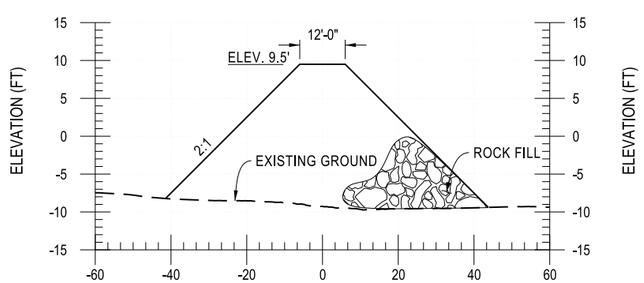

TYPICAL ROCK BARRIER SECTION

HORIZONTAL VERTICAL

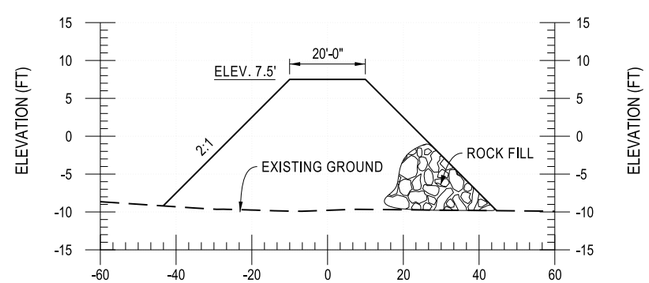

TYPICAL ROCK BARRIER WEIR SECTION

HORIZONTAL VERTICAL

PRELIMINARY - SUBJECT TO REVISIONS

DATUM: CALIFORNIA STATE PLANE ZONE 3, NAD 83, NAVD 88, FEET

STATE OF CALIFORNIA
CALIFORNIA NATURAL RESOURCES AGENCY
DEPARTMENT OF WATER RESOURCES
DIVISION OF ENGINEERING
STATE WATER FACILITIES

REV.	DESCRIPTION	SUB.	APP.

REGISTERED PROFESSIONAL ENGINEER JAMES M. LOPES No. 62184 Exp. 9-30-15 CIVIL STATE OF CALIFORNIA

DESIGNED:	CHECKED:
Nathan W. Smith REG. C.E. No. 78185	Anna B. Gutierrez REG. C.E. No. 72270
DRAWN:	REVIEWED:
Nathan W. Smith REG. C.E. No. 78185	James M. Lopes REG. C.E. No. 62184

SUBMITTED:
James M. Lopes
REG. C.E. No. 62184

APPROVAL RECOMMENDED: DATE:

CHIEF, GENERAL ENGINEERING SECTION, REG. C.E. No. 55947

APPROVED: DATE:

CHIEF, DELTA ENGINEERING BRANCH, REG. C.E. No. 47259

THINK SAFETY - ACT SAFELY

STATE WATER FACILITIES

DROUGHT EMERGENCY TEMPORARY ROCK BARRIERS

SUTTER SLOUGH, STEAMBOAT SLOUGH, AND WEST FALSE RIVER

STEAMBOAT SLOUGH

SECTIONS

SPEC. NO.	SHEET NO.	REVISION	DRAWING NO.
14-11	009		C-208

V= Plot,BW,11x17,PEN
4/1/2014

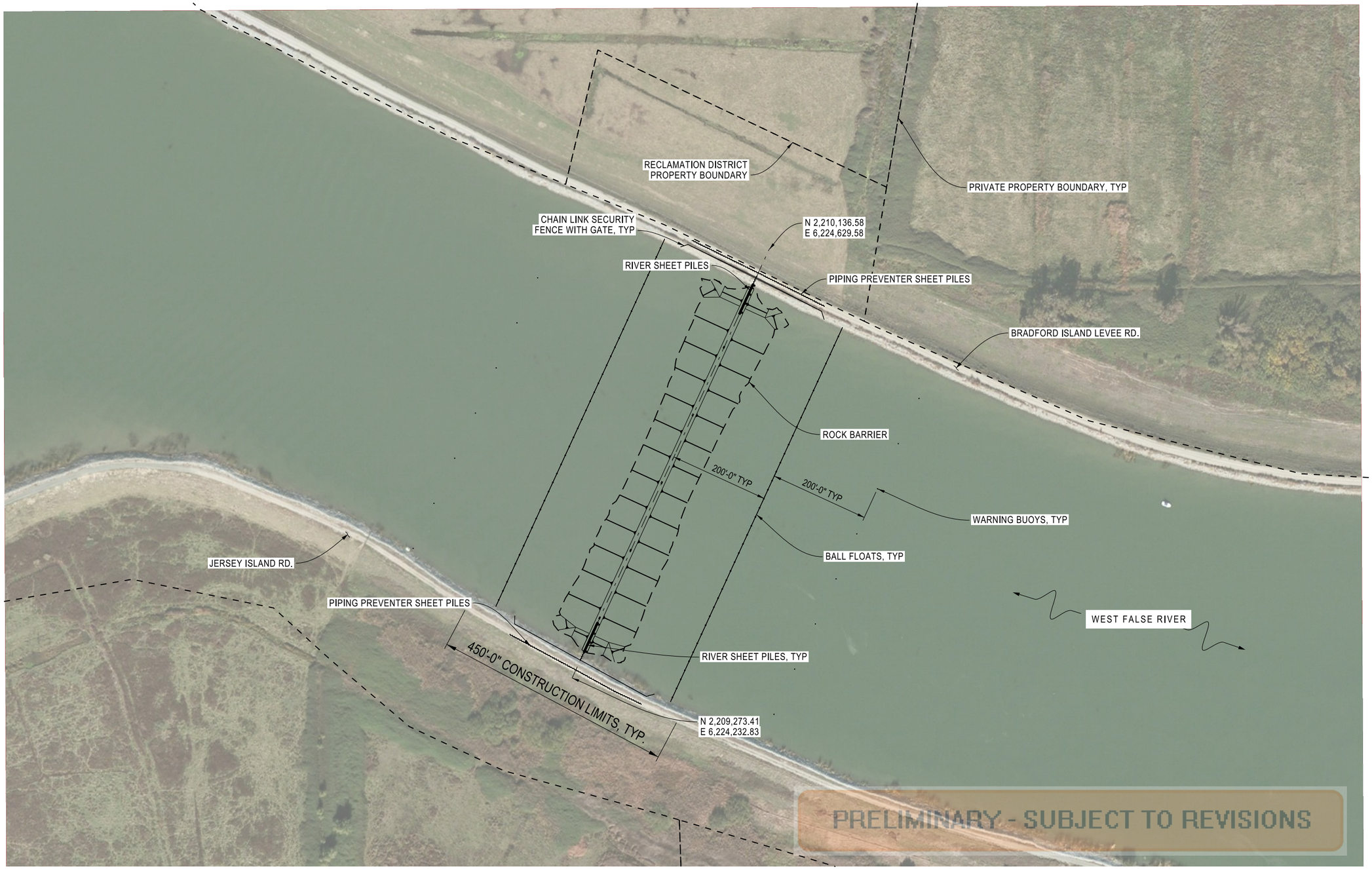

WEST FALSE RIVER - GENERAL PLAN

SCALE 1 : 100

0 50 100

DATUM: CALIFORNIA STATE PLANE ZONE 3, NAD 83, NAVD 88, FEET

STATE OF CALIFORNIA
CALIFORNIA NATURAL RESOURCES AGENCY
DEPARTMENT OF WATER RESOURCES
DIVISION OF ENGINEERING
STATE WATER FACILITIES

REV.	DESCRIPTION	SUB.	APP.

REGISTERED PROFESSIONAL ENGINEER JAMES M. LOPES No. 62184 Exp. 9-30-15 CIVIL STATE OF CALIFORNIA

DESIGNED:	CHECKED:
Nathan W. Smith REG. C.E. No. 78185	Anna B. Gutierrez REG. C.E. No. 72270
DRAWN:	REVIEWED:
Nathan W. Smith REG. C.E. No. 78185	James M. Lopes REG. C.E. No. 62184

SUBMITTED:
James M. Lopes
REG. C.E. No. 62184

APPROVAL RECOMMENDED: DATE:

CHIEF, GENERAL ENGINEERING SECTION, REG. C.E. No. 55947

APPROVED: DATE:

CHIEF, DELTA ENGINEERING BRANCH, REG. C.E. No. 47259

THINK SAFETY - ACT SAFELY

STATE WATER FACILITIES

DROUGHT EMERGENCY TEMPORARY ROCK BARRIERS
SUTTER SLOUGH, STEAMBOAT SLOUGH, AND WEST FALSE RIVER

WEST FALSE RIVER

GENERAL PLAN

SPEC. NO.	SHEET NO.	REVISION	DRAWING NO.
14-11	010		C-209

V= Plot,BW,11x17,PEN
4/1/2014

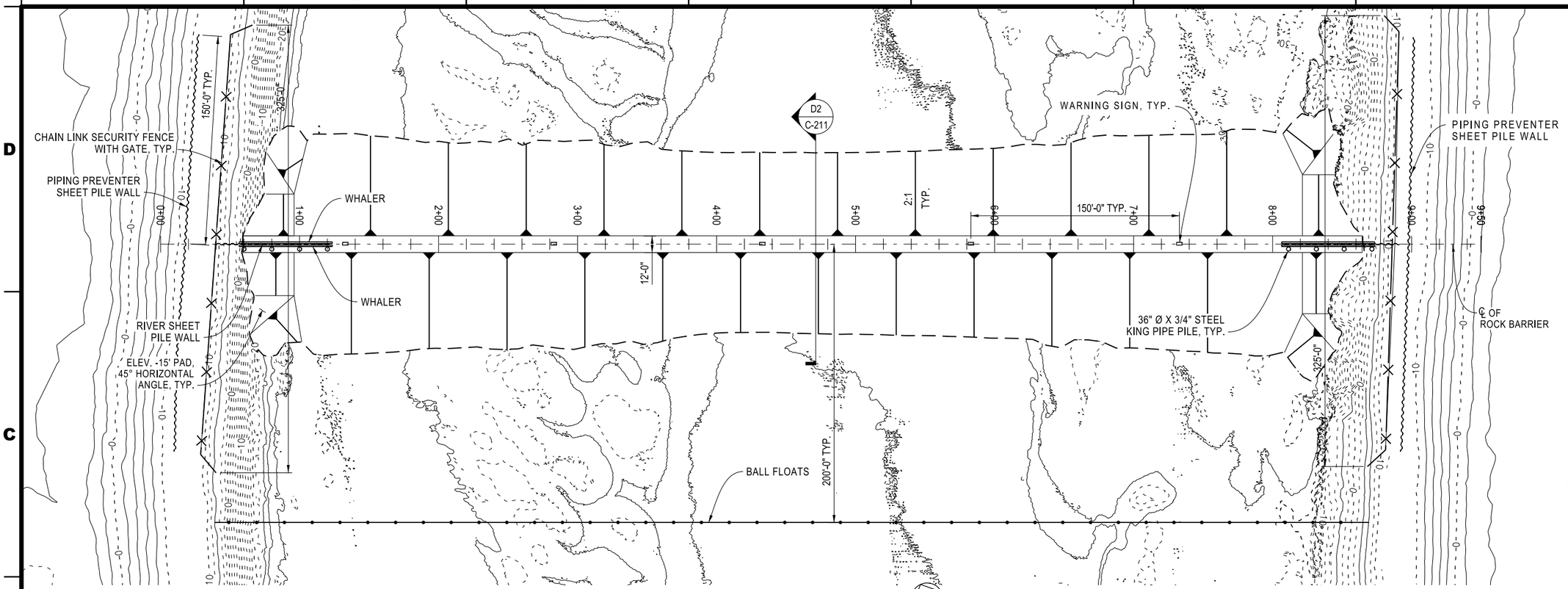

WEST FALSE RIVER - SITE PLAN

SCALE 1 : 40

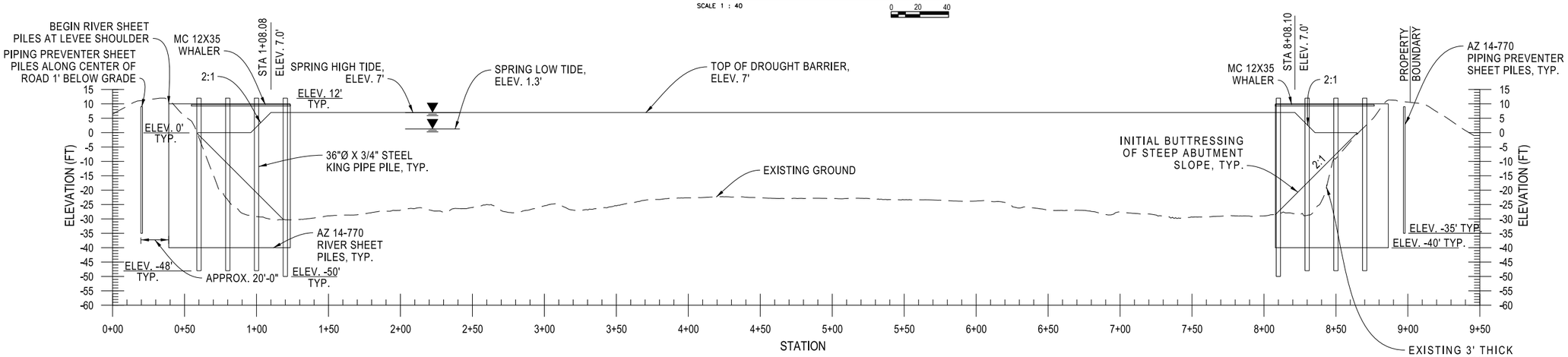

WEST FALSE RIVER - PROFILE

HORIZONTAL 0 20 40 VERTICAL 0 10 20

PRELIMINARY - SUBJECT TO REVISIONS

DATUM: CALIFORNIA STATE PLANE ZONE 3, NAD 83, NAVD 88, FEET

STATE OF CALIFORNIA
CALIFORNIA NATURAL RESOURCES AGENCY
DEPARTMENT OF WATER RESOURCES
DIVISION OF ENGINEERING
STATE WATER FACILITIES

REV.	DESCRIPTION	SUB.	APP.

REGISTERED PROFESSIONAL ENGINEER JAMES M. LOPES No. 62184 Exp. 9-30-15 CIVIL STATE OF CALIFORNIA

DESIGNED: N. W. Smith REG. C.E. No. 78185	CHECKED: Anna B. Gutierrez REG. C.E. No. 72270
DRAWN: N. W. Smith REG. C.E. No. 78185	REVIEWED: J. M. Lopes REG. C.E. No. 62184
SUBMITTED: James M. Lopes REG. C.E. No. 62184	

APPROVAL RECOMMENDED: DATE:
CHIEF, GENERAL ENGINEERING SECTION, REG. C.E. No. 55947

APPROVED: DATE:
CHIEF, DELTA ENGINEERING BRANCH, REG. C.E. No. 47259

THINK SAFETY - ACT SAFELY

STATE WATER FACILITIES

DROUGHT EMERGENCY TEMPORARY ROCK BARRIERS

SUTTER SLOUGH, STEAMBOAT SLOUGH, AND WEST FALSE RIVER

WEST FALSE RIVER

SITE PLAN AND PROFILE

SPEC. NO.	SHEET NO.	REVISION	DRAWING NO.
14-11	011		C-210

V:\ Plot.BW.11x17.PEN
4/1/2014

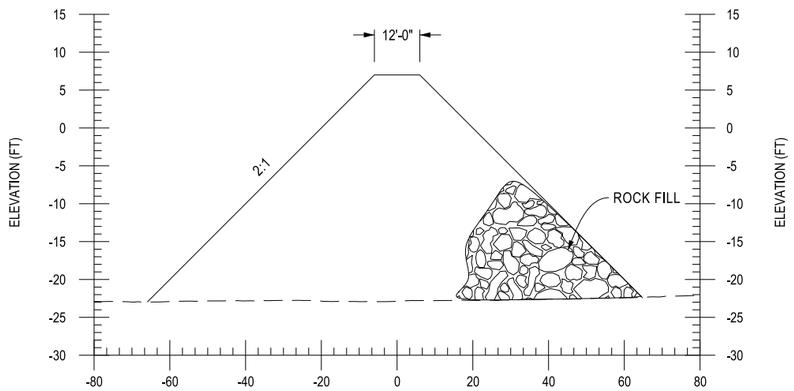

D2 C-210 TYPICAL ROCK BARRIER SECTION

VERTICAL 0 5 10 HORIZONTAL 0 10 20

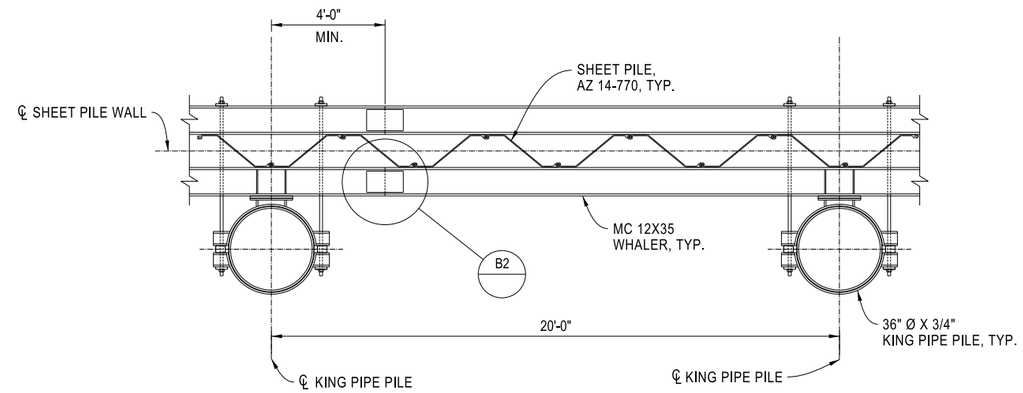

PLAN

TYPICAL WHALER SPLICE

SCALE 3/8" : 1' 0 1'-4" 2'-8"

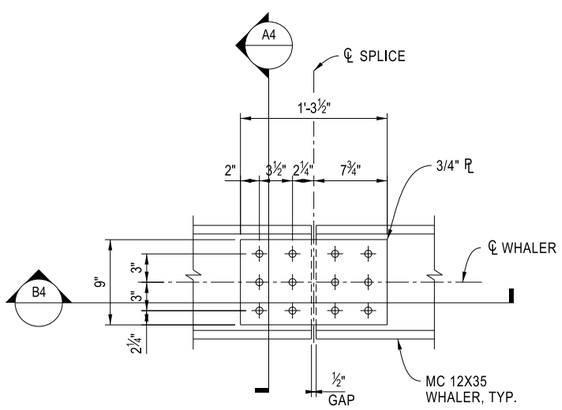

B2 WHALER SPLICE DETAIL

SCALE 1 : 8" 0 4" 8"

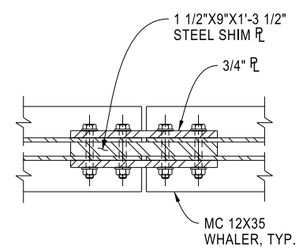

B4 WHALER SPLICE DETAIL 2

SCALE 1 : 8" 0 4" 8"

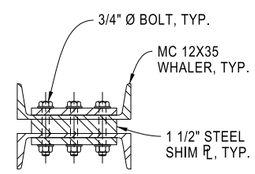

A4 WHALER SPLICE DETAIL 3

SCALE 1 : 8" 0 4" 8"

PRELIMINARY - SUBJECT TO REVISIONS

DATUM: CALIFORNIA STATE PLANE ZONE 3, NAD 83, NAVD 88, FEET

STATE OF CALIFORNIA
CALIFORNIA NATURAL RESOURCES AGENCY
DEPARTMENT OF WATER RESOURCES
DIVISION OF ENGINEERING
STATE WATER FACILITIES

REV.	DESCRIPTION	SUB.	APP.

REGISTERED PROFESSIONAL ENGINEER JAMES M. LOPES No. 62184 Exp. 9-30-15 CIVIL STATE OF CALIFORNIA

DESIGNED:	CHECKED:
N. W. Smith REG. C.E. No. 78185	Anna B. Gutierrez REG. C.E. No. 72270
DRAWN:	REVIEWED:
N. W. Smith REG. C.E. No. 78185	J. M. Lopes REG. C.E. No. 62184

SUBMITTED:
James M. Lopes
REG. C.E. No. 62184

APPROVAL RECOMMENDED: DATE:

CHIEF, GENERAL ENGINEERING SECTION, REG. C.E. No. 55947

APPROVED: DATE:

CHIEF, DELTA ENGINEERING BRANCH, REG. C.E. No. 47259

THINK SAFETY - ACT SAFELY

STATE WATER FACILITIES

DROUGHT EMERGENCY
TEMPORARY ROCK BARRIERS

SUTTER SLOUGH, STEAMBOAT SLOUGH, AND WEST FALSE RIVER

WEST FALSE RIVER

DETAILS AND SECTION

SPEC. NO.	SHEET NO.	REVISION	DRAWING NO.
14-11	012		C-211

V= Plot.BW.11x17.PEN
4/1/2014

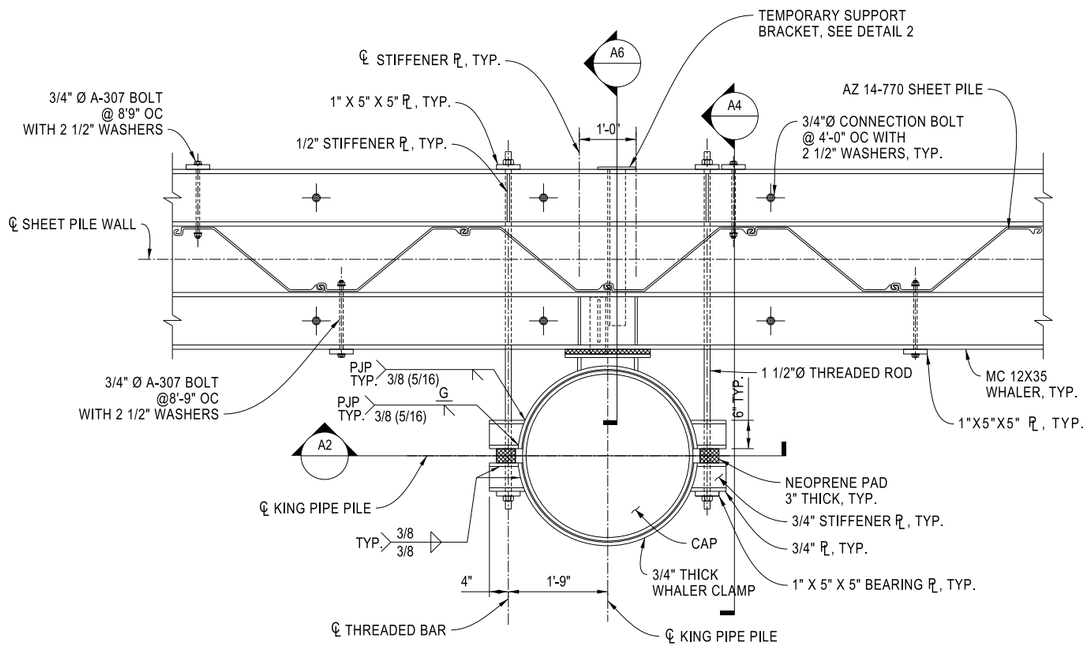

PLAN DETAIL 01

SCALE 1 : 3/4"

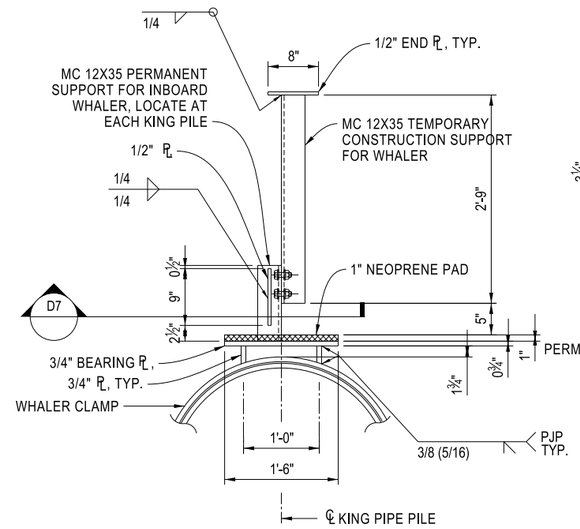

PLAN DETAIL 02

SCALE 1" : 1"

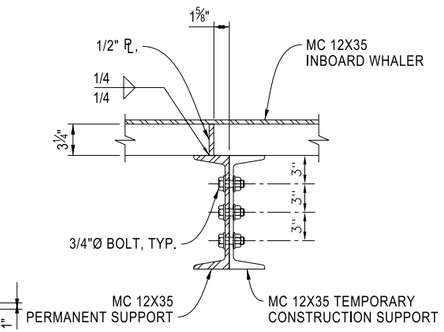

D7 SECTION DETAIL

SCALE 1 : 1 1/2"

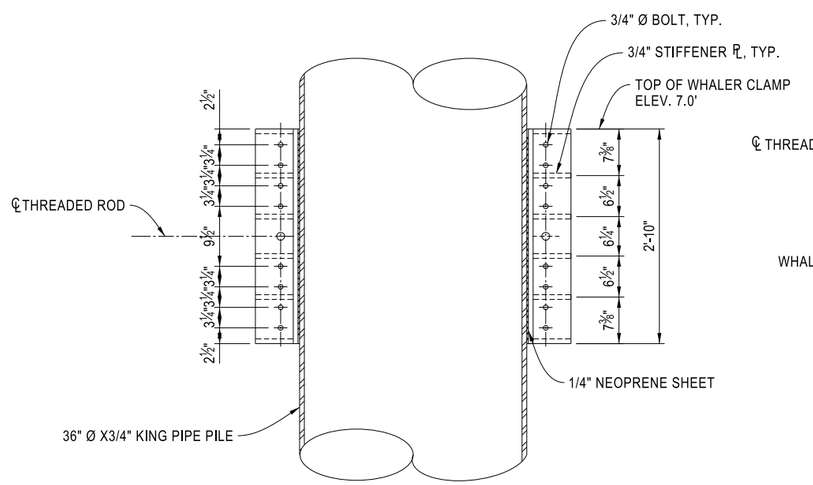

A2 SECTION DETAIL

SCALE 1 : 1

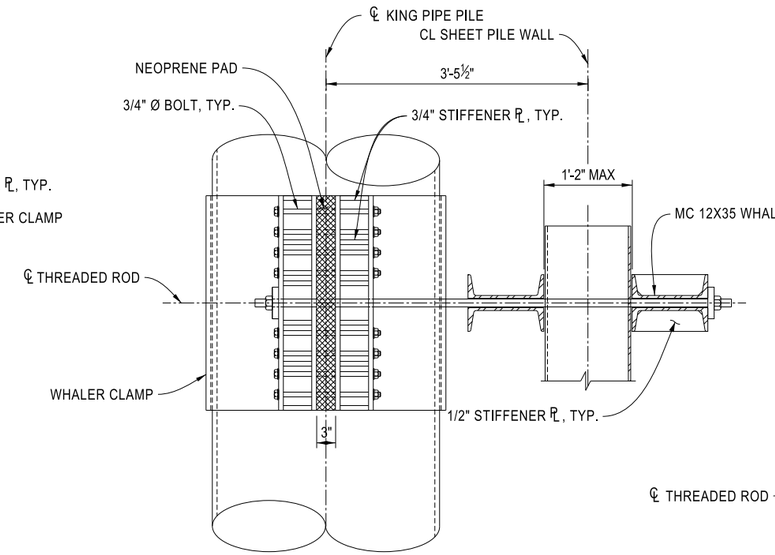

A4 SECTION DETAIL

SCALE 1 : 1

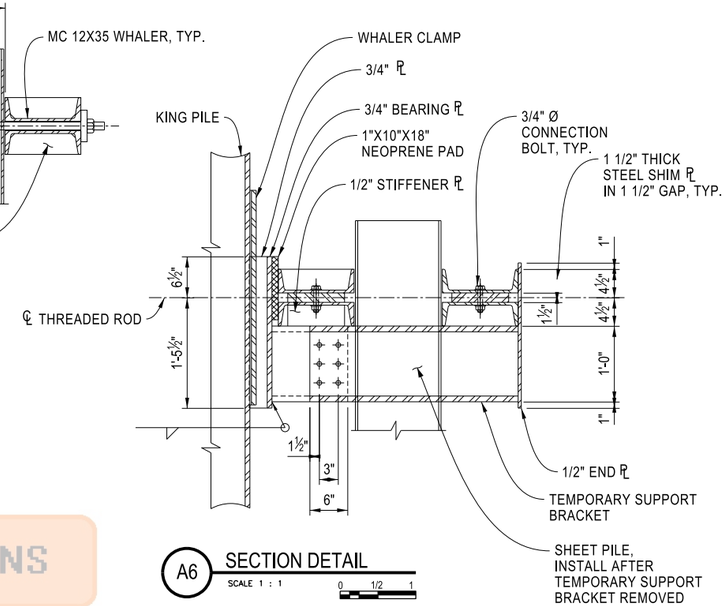

A6 SECTION DETAIL

SCALE 1 : 1

PRELIMINARY - SUBJECT TO REVISIONS

STATE OF CALIFORNIA
CALIFORNIA NATURAL RESOURCES AGENCY
DEPARTMENT OF WATER RESOURCES
DIVISION OF ENGINEERING
STATE WATER FACILITIES

REV.	DESCRIPTION	SUB.	APP.

REGISTERED PROFESSIONAL ENGINEER JAMES M. LOPES No. 62184 Exp. 9-30-15 CIVIL STATE OF CALIFORNIA

DESIGNED:	CHECKED:
N. W. Smith REG. C.E. No. 78185	Anna B. Gutierrez REG. C.E. No. 72270
DRAWN:	REVIEWED:
N. W. Smith REG. C.E. No. 78185	J. M. Lopes REG. C.E. No. 62184

SUBMITTED:
James M. Lopes
REG. C.E. No. 62184

APPROVAL RECOMMENDED: DATE:

CHIEF, GENERAL ENGINEERING SECTION, REG. C.E. No. 55947

APPROVED: DATE:

CHIEF, DELTA ENGINEERING BRANCH, REG. C.E. No. 47259

THINK SAFETY - ACT SAFELY

STATE WATER FACILITIES

DROUGHT EMERGENCY TEMPORARY ROCK BARRIERS

SUTTER SLOUGH, STEAMBOAT SLOUGH, AND WEST FALSE RIVER

WEST FALSE RIVER

DETAILS 2

SPEC. NO.	SHEET NO.	REVISION	DRAWING NO.
14-11	013		C-212

VP: Plot.BW.11x17.PEN
4/1/2014

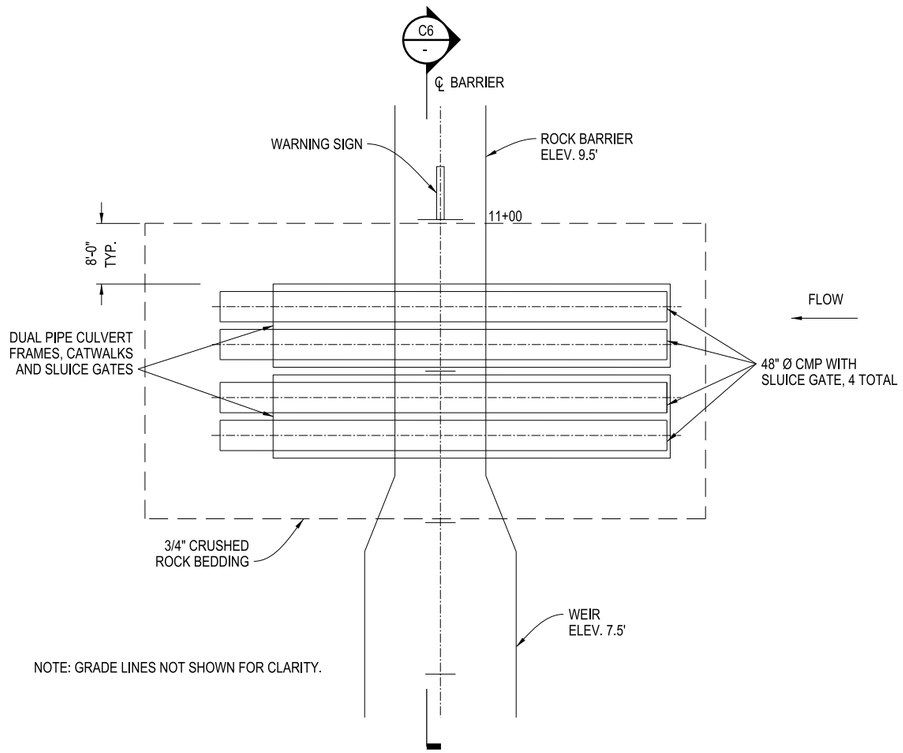

PLAN

SCALE 1 : 10

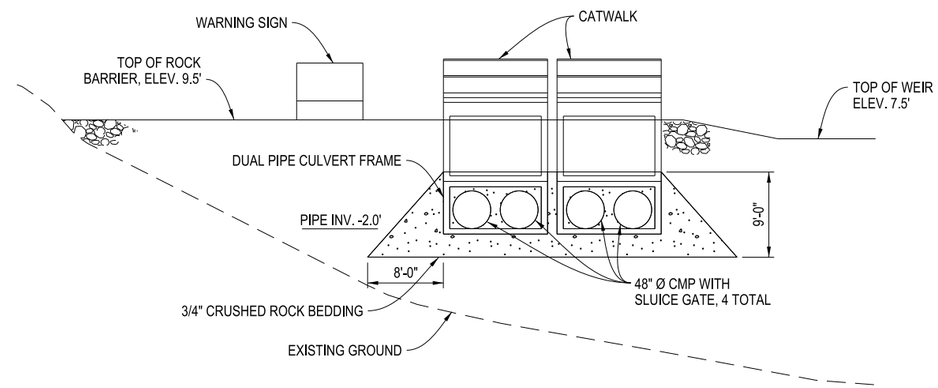

C6 SECTION

SCALE 1 : 8

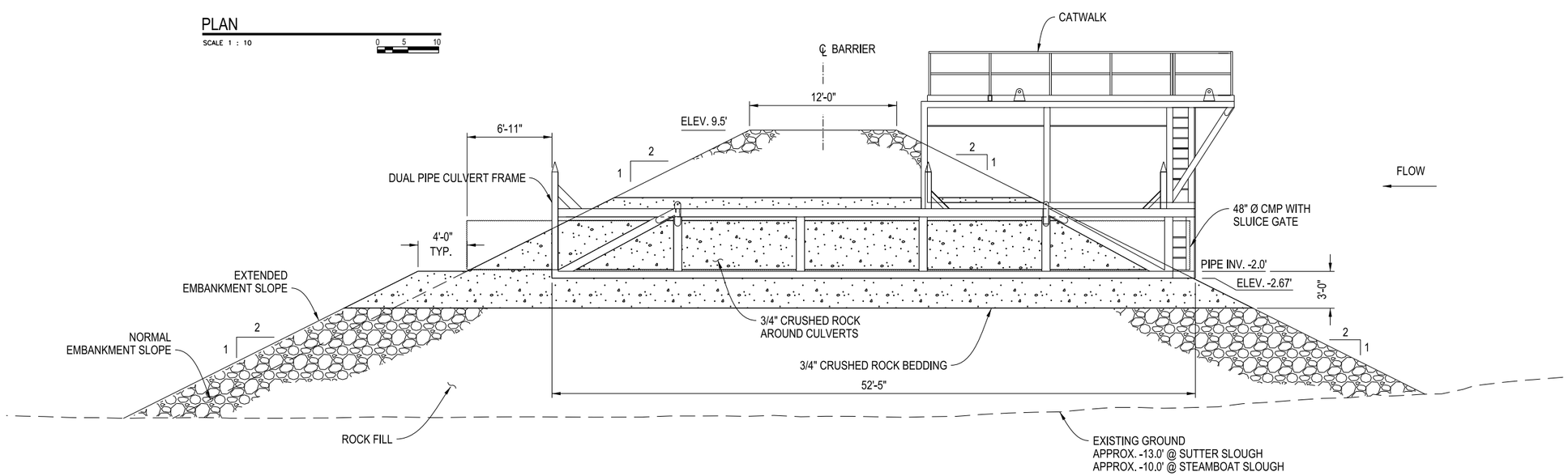

TYPICAL SECTION - 48" CMP DUAL PIPE FRAMES

SCALE 1 : 5

PRELIMINARY - SUBJECT TO REVISIONS

STATE OF CALIFORNIA
CALIFORNIA NATURAL RESOURCES AGENCY
DEPARTMENT OF WATER RESOURCES
DIVISION OF ENGINEERING
STATE WATER FACILITIES

REV.	DESCRIPTION	SUB.	APP.

REGISTERED PROFESSIONAL ENGINEER JAMES M. LOPES No. 62184 Exp. 9-30-15 CIVIL STATE OF CALIFORNIA

DESIGNED:	CHECKED:
Anna B. Gutierrez REG. C.E. No. 72270	Nathan W. Smith REG. C.E. No. 78185
DRAWN:	REVIEWED:
Anna B. Gutierrez REG. C.E. No. 72270	James M. Lopes REG. C.E. No. 62184

SUBMITTED:
James M. Lopes
REG. C.E. No. 62184

APPROVAL RECOMMENDED: DATE:

CHIEF, GENERAL ENGINEERING SECTION, REG. C.E. No. 55947

APPROVED: DATE:

CHIEF, DELTA ENGINEERING BRANCH, REG. C.E. No. 47259

THINK SAFETY - ACT SAFELY

STATE WATER FACILITIES

DROUGHT EMERGENCY
TEMPORARY ROCK BARRIERS

SUTTER SLOUGH, STEAMBOAT SLOUGH, AND WEST FALSE RIVER

SUTTER SLOUGH AND
STEAMBOAT SLOUGH

TYPICAL CULVERT PLAN AND SECTIONS

SPEC. NO.	SHEET NO.	REVISION	DRAWING NO.
14-11	014		C-213

V= Plot.BW,11x17,PEN
4/1/2014

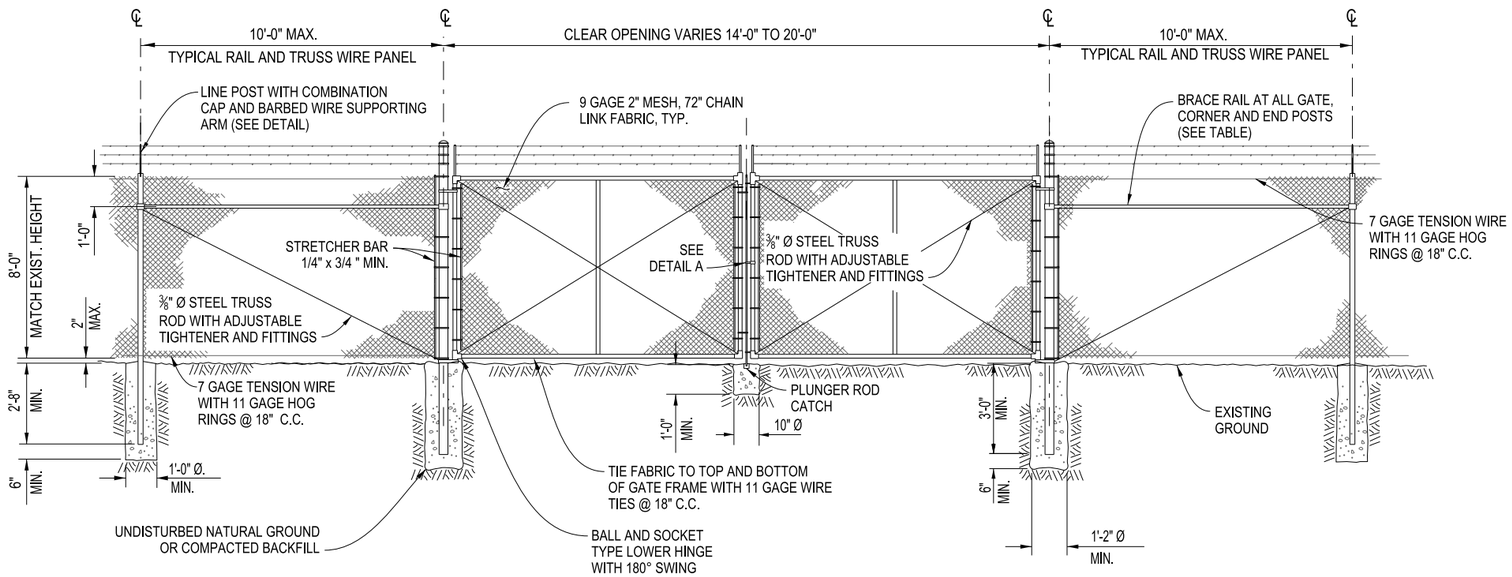

DOUBLE DRIVE GATE DETAIL

NOT TO SCALE

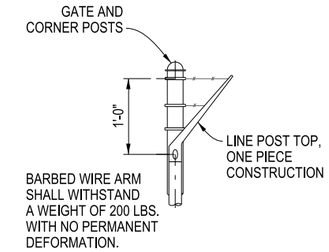

DETAIL - BARB WIRE SUPPORT ARM

SCALE 1 : 1

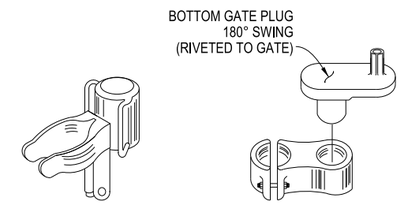

DETAIL A

BOTTOM GATE HINGE TYPICAL FOR ALL GATES

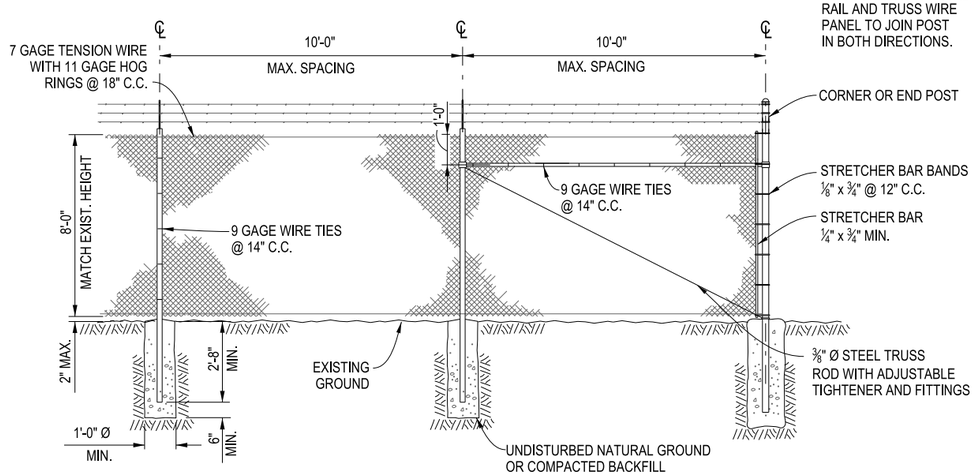

NOTE:
FOR CORNERS, TYPICAL RAIL AND TRUSS WIRE PANEL TO JOIN POST IN BOTH DIRECTIONS.

TYPICAL FENCE ELEVATION

NOT TO SCALE

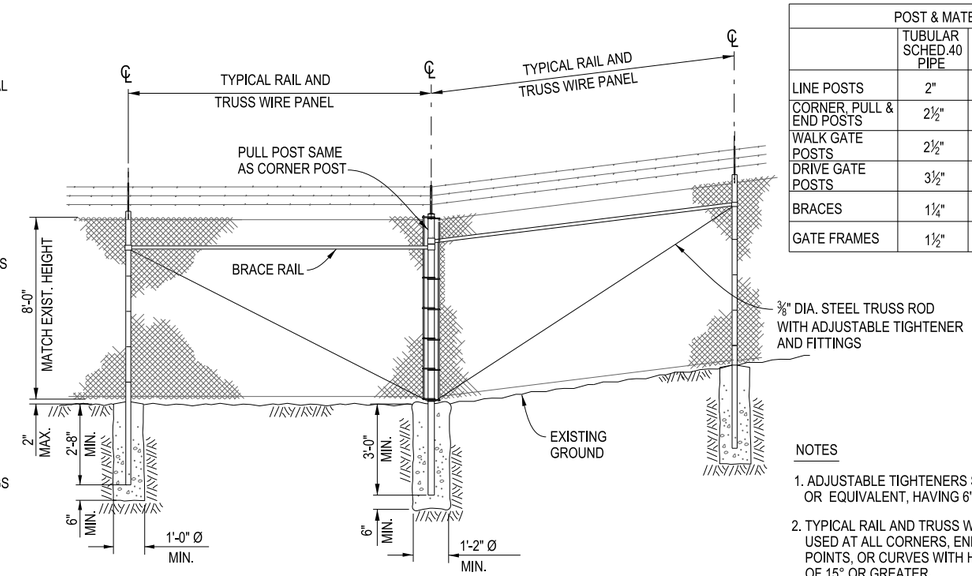

NOTE: TO BE INSTALLED AT NO MORE THAN 1000' INTERVALS ALONG FENCE LINE

RAIL AND TRUSS WIRE PANEL

NOT TO SCALE

POST & MATERIAL TABLE			
	TUBULAR SCHED.40 PIPE	OUTSIDE DIA.	THICKNESS
LINE POSTS	2"	2.375"	0.154"
CORNER, PULL & END POSTS	2½"	2.875"	0.203"
WALK GATE POSTS	2½"	2.875"	0.203"
DRIVE GATE POSTS	3½"	4.000"	0.226"
BRACES	1¼"	1.660"	0.140"
GATE FRAMES	1½"	1.900"	0.145"

NOTES

1. ADJUSTABLE TIGHTENERS SHALL BE TURNBUCKLE OR EQUIVALENT, HAVING 6" MIN. TAKEUP.
2. TYPICAL RAIL AND TRUSS WIRE PANELS SHALL BE USED AT ALL CORNERS, END POSTS AND ANGLE POINTS, OR CURVES WITH HORIZONTAL DEFLECTION OF 15° OR GREATER.
3. SEE SPECIFICATIONS FOR ALTERNATIVE POSTS AND MATERIALS SUBMITTED.
4. DRAWING NOT TO SCALE.

PRELIMINARY - SUBJECT TO REVISIONS

STATE OF CALIFORNIA
CALIFORNIA NATURAL RESOURCES AGENCY
DEPARTMENT OF WATER RESOURCES
DIVISION OF ENGINEERING
STATE WATER FACILITIES

REV.	DESCRIPTION	SUB.	APP.

REGISTERED PROFESSIONAL ENGINEER JAMES M. LOPES No. 62184 Exp. 9-30-15 CIVIL STATE OF CALIFORNIA

DESIGNED: Anna B. Gutierrez, REG. C.E. No. 72270
CHECKED: Nathan W. Smith, REG. C.E. No. 78185
DRAWN: Anna B. Gutierrez, REG. C.E. No. 72270
REVIEWED: James M. Lopes, REG. C.E. No. 62184
SUBMITTED: James M. Lopes, REG. C.E. No. 62184

APPROVAL RECOMMENDED: DATE:
CHIEF, GENERAL ENGINEERING SECTION, REG. C.E. No. 55947

APPROVED: DATE:
CHIEF, DELTA ENGINEERING BRANCH, REG. C.E. No. 47259

THINK SAFETY - ACT SAFELY

STATE WATER FACILITIES

DROUGHT EMERGENCY TEMPORARY ROCK BARRIERS

SUTTER SLOUGH, STEAMBOAT SLOUGH AND WEST FALSE RIVER

STANDARD FENCING DETAILS

8' CHAIN LINK WITH BARBED WIRE

SPEC. NO.	SHEET NO.	REVISION	DRAWING NO.
14-11	015		C-214

V:\ Plot.BW.11x17.PEN
4/1/2014