STATE OF CALIFORNIA

CALIFORNIA NATURAL RESOURCES AGENCY

DEPARTMENT OF WATER RESOURCES

DIVISION OF ENGINEERING

LOCATION MAP

STATE WATER FACILITIES

DROUGHT EMERGENCY

TEMPORARY ROCK BARRIER - 2015

WEST FALSE RIVER

SPECIFICATION NO. 15-04

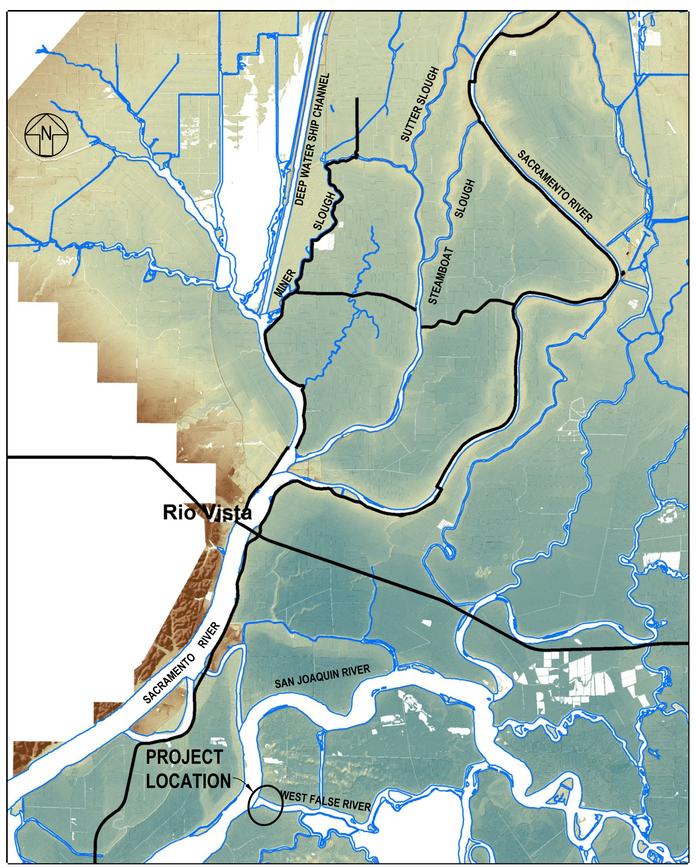

LOCATION MAP

LIST OF DRAWINGS

SHEET NO.	DRAWING NO.	DRAWING TITLE
001	G-101	COVER SHEET, LOCATION MAP AND LIST OF DRAWINGS
002	C-201	GENERAL PLAN
003	C-202	WEST FALSE RIVER - GENERAL PLAN
004	C-203	WEST FALSE RIVER - SITE PLAN AND PROFILE
005	C-204	WEST FALSE RIVER - DETAILS AND SECTION
006	C-205	WEST FALSE RIVER - DETAILS 2

STATE OF CALIFORNIA
CALIFORNIA NATURAL RESOURCES AGENCY
DEPARTMENT OF WATER RESOURCES
DIVISION OF ENGINEERING
STATE WATER FACILITIES

REV.	DESCRIPTION	SUB.	APP.

THINK SAFETY - ACT SAFELY

APPROVED: DATE:

CHIEF, DIVISION OF ENGINEERING. REG. C.E. No. 52771

SPEC. NO.	SHEET NO.	REVISION	DRAWING NO.
15-04	001		G-101

VI= Plot.BW.22x34.PEN
4/10/2015

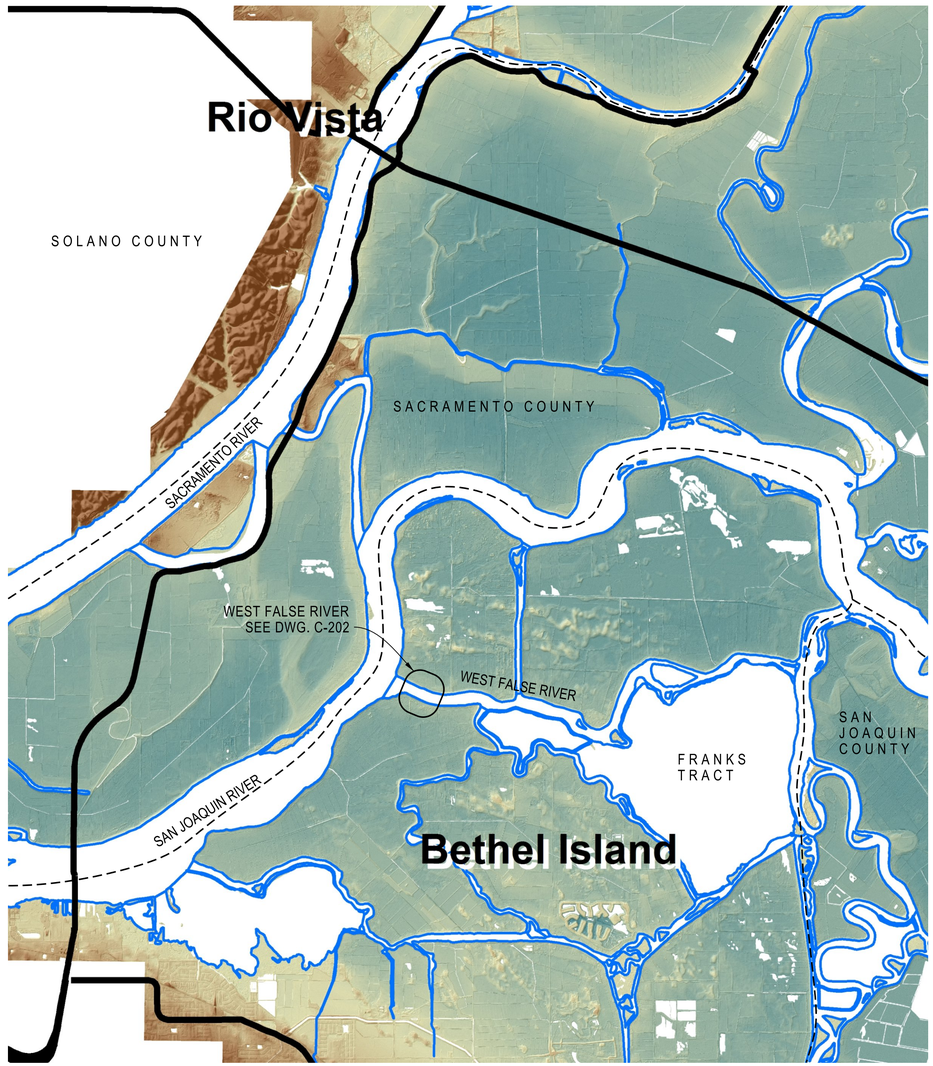

GENERAL PLAN

NOT TO SCALE

STATE OF CALIFORNIA
CALIFORNIA NATURAL RESOURCES AGENCY
DEPARTMENT OF WATER RESOURCES
DIVISION OF ENGINEERING
STATE WATER FACILITIES

REV.	DESCRIPTION	SUB.	APP.

REGISTERED PROFESSIONAL ENGINEER STATE OF CALIFORNIA

DESIGNED: CHECKED:
DRAWN: REVIEWED:
SUBMITTED:
APPROVAL RECOMMENDED: DATE:
APPROVED: DATE:

THINK SAFETY - ACT SAFELY

STATE WATER FACILITIES
DROUGHT EMERGENCY

TEMPORARY ROCK BARRIER
2015

WEST FALSE RIVER

GENERAL PLAN

SPEC. NO.	SHEET NO.	REVISION	DRAWING NO.
15-04	002		C-201

VI= Plot.BW.22x34.PEN
4/13/2015

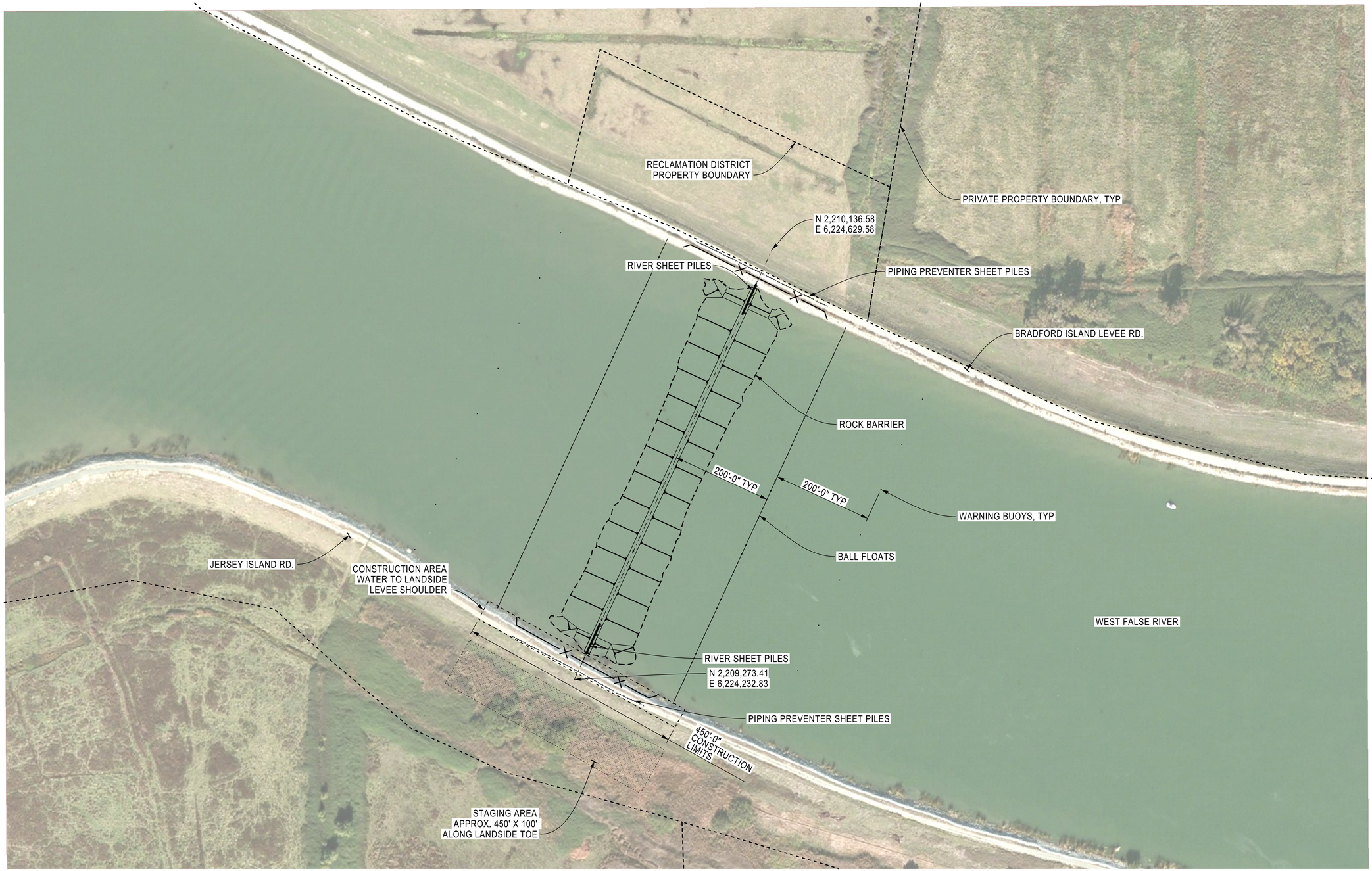

WEST FALSE RIVER - GENERAL PLAN

SCALE: 1"= 100'

0 50 100

DATUM: CALIFORNIA STATE PLANE ZONE 3, NAD 83, NAVD 88, FEET

STATE OF CALIFORNIA
CALIFORNIA NATURAL RESOURCES AGENCY
DEPARTMENT OF WATER RESOURCES
DIVISION OF ENGINEERING
STATE WATER FACILITIES

REV.	DESCRIPTION	SUB.	APP.

REGISTERED PROFESSIONAL ENGINEER STATE OF CALIFORNIA

DESIGNED: CHECKED:

DRAWN: REVIEWED:

SUBMITTED:

APPROVAL RECOMMENDED: DATE:

APPROVED: DATE:

THINK SAFETY - ACT SAFELY

STATE WATER FACILITIES
DROUGHT EMERGENCY

TEMPORARY ROCK BARRIER
2015

WEST FALSE RIVER

WEST FALSE RIVER

GENERAL PLAN

SPEC. NO.	SHEET NO.	REVISION	DRAWING NO.
15-04	003		C-202

VI= Plot.BW.22x34.PEN
4/13/2015

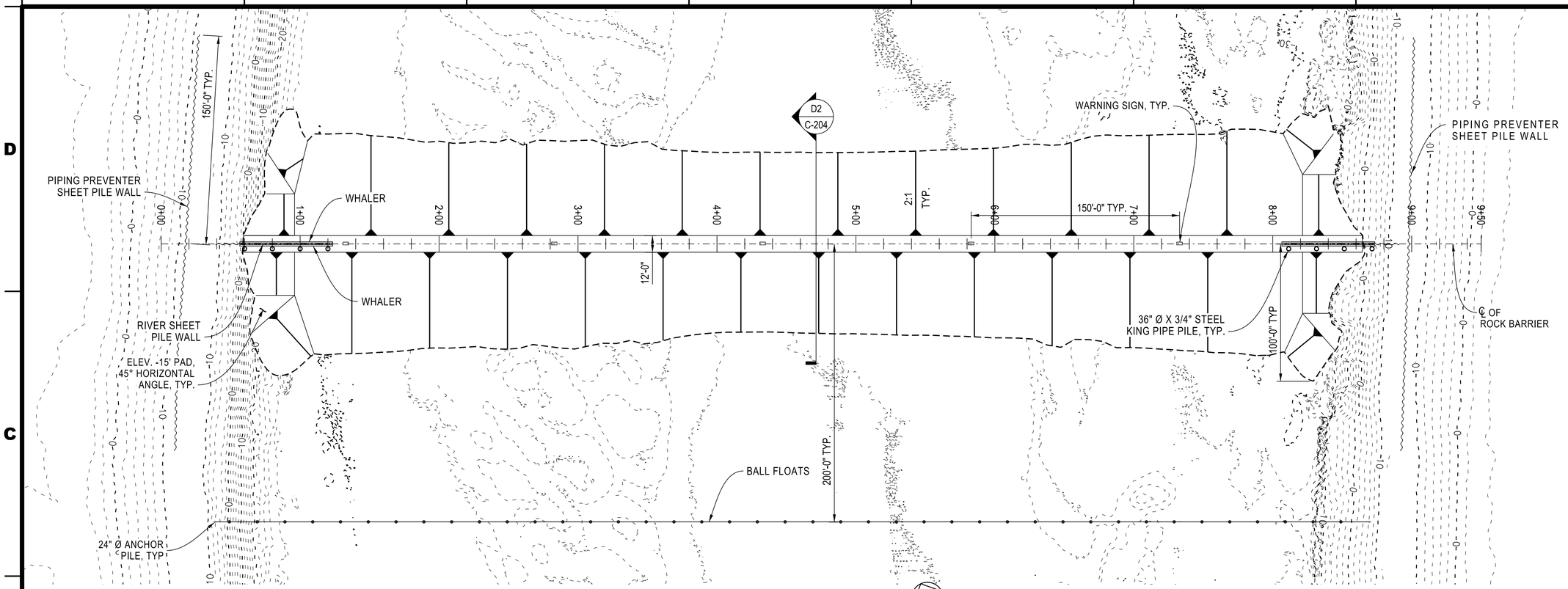

WEST FALSE RIVER - SITE PLAN

SCALE: 1"= 40'

0 20 40

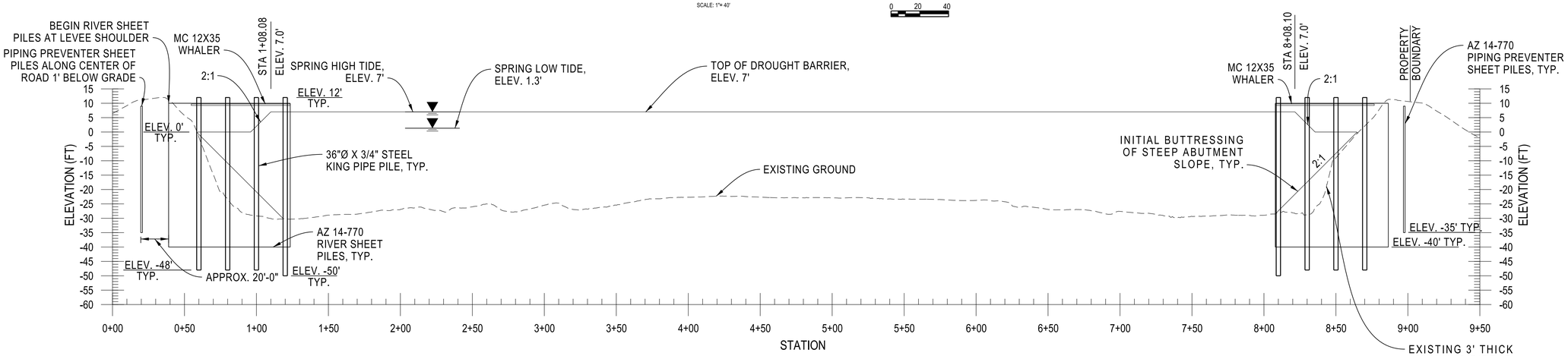

WEST FALSE RIVER - PROFILE

0 20 40 HORIZONTAL

0 10 20 VERTICAL

DATUM: CALIFORNIA STATE PLANE ZONE 3, NAD 83, NAVD 88, FEET

STATE OF CALIFORNIA
CALIFORNIA NATURAL RESOURCES AGENCY
DEPARTMENT OF WATER RESOURCES
DIVISION OF ENGINEERING
STATE WATER FACILITIES

REV.	DESCRIPTION	SUB.	APP.

REGISTERED PROFESSIONAL ENGINEER STATE OF CALIFORNIA

DESIGNED: CHECKED:
DRAWN: REVIEWED:
SUBMITTED:
APPROVAL RECOMMENDED: DATE:
APPROVED: DATE:

THINK SAFETY - ACT SAFELY

STATE WATER FACILITIES
DROUGHT EMERGENCY

TEMPORARY ROCK BARRIER
2015

WEST FALSE RIVER

WEST FALSE RIVER

SITE PLAN AND PROFILE

SPEC. NO.	SHEET NO.	REVISION	DRAWING NO.
15-04	004		C-203

V:= Plot.BW.22x34.PEN
4/13/2015

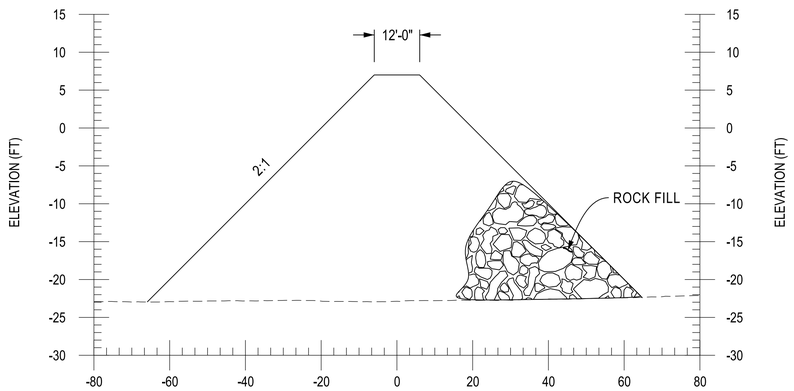

D2 C-203 TYPICAL ROCK BARRIER SECTION

VERTICAL 0 5 10 HORIZONTAL 0 10 20

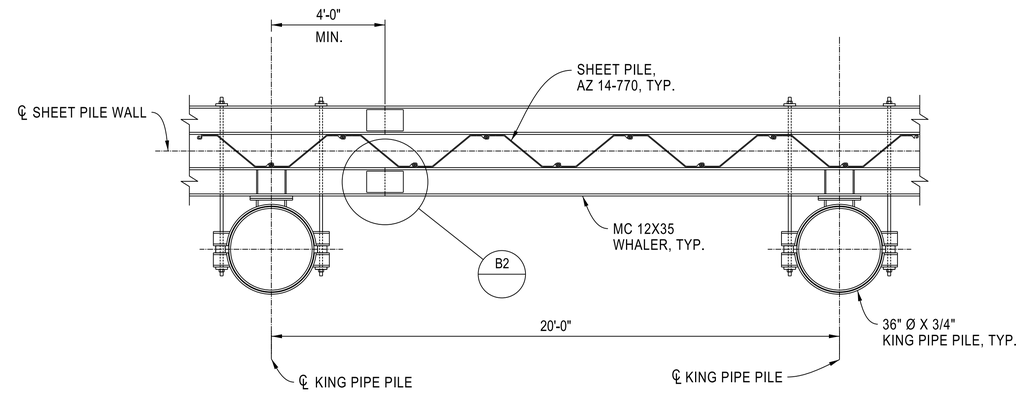

PLAN

TYPICAL WHALER SPLICE

SCALE: 3/8" = 1' 0 1'-4" 2'-8"

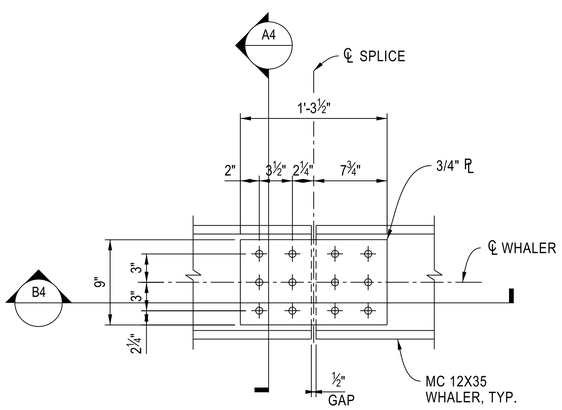

B2 WHALER SPLICE DETAIL

SCALE: 1" = 8" 0 4" 8"

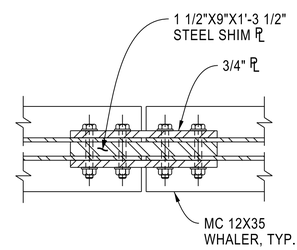

B4 WHALER SPLICE DETAIL 2

SCALE: 1" = 8" 0 4" 8"

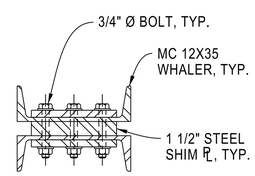

A4 WHALER SPLICE DETAIL 3

SCALE: 1" = 8" 0 4" 8"

DATUM: CALIFORNIA STATE PLANE ZONE 3, NAD 83, NAVD 88, FEET

STATE OF CALIFORNIA
CALIFORNIA NATURAL RESOURCES AGENCY
DEPARTMENT OF WATER RESOURCES
DIVISION OF ENGINEERING
STATE WATER FACILITIES

REV.	DESCRIPTION	SUB.	APP.

REGISTERED PROFESSIONAL ENGINEER STATE OF CALIFORNIA

DESIGNED: CHECKED:

DRAWN: REVIEWED:

SUBMITTED:

APPROVAL RECOMMENDED: DATE:

APPROVED: DATE:

THINK SAFETY - ACT SAFELY

STATE WATER FACILITIES
DROUGHT EMERGENCY

TEMPORARY ROCK BARRIER
2015

WEST FALSE RIVER

WEST FALSE RIVER

DETAILS AND SECTION

SPEC. NO.	SHEET NO.	REVISION	DRAWING NO.
15-04	005		C-204

VI= Plot.BW.22x34.PEN
4/13/2015

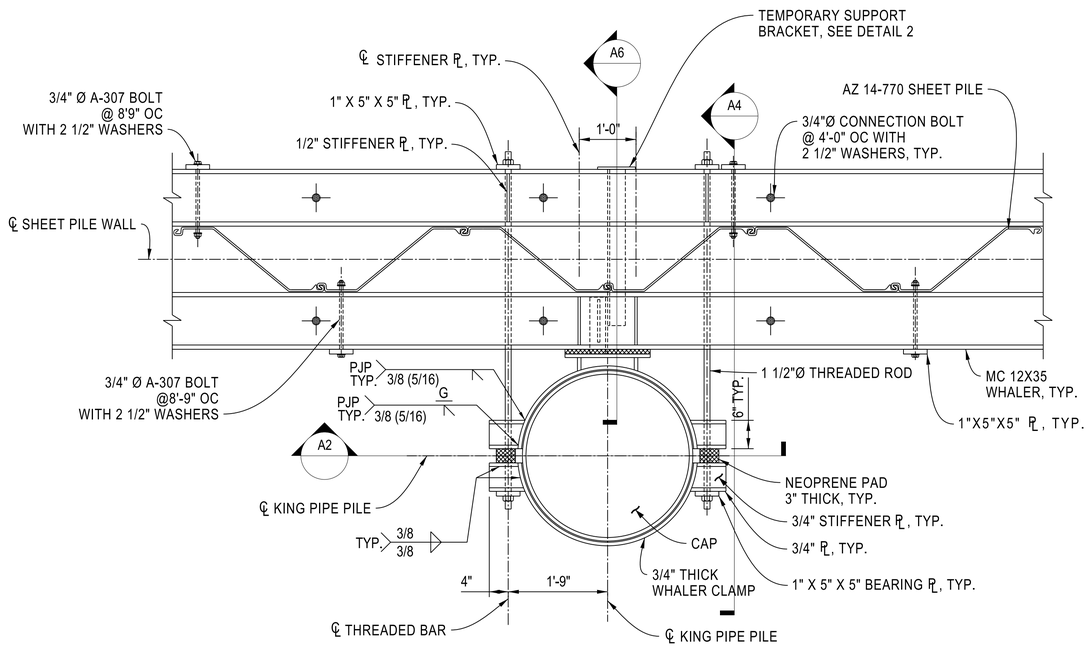

PLAN DETAIL 01

SCALE: 1"= 3/4"

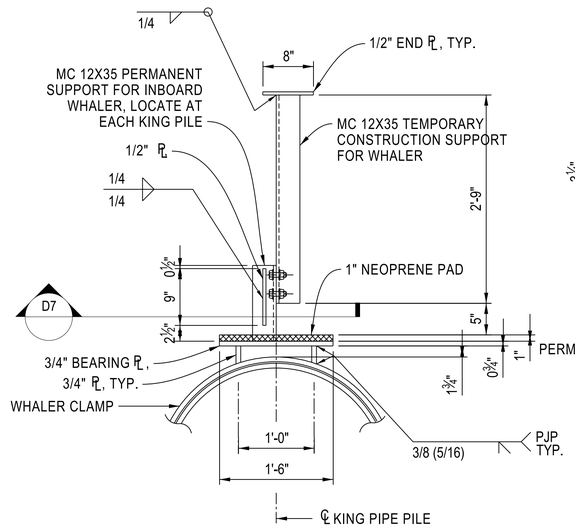

PLAN DETAIL 02

SCALE: 1"= 1'

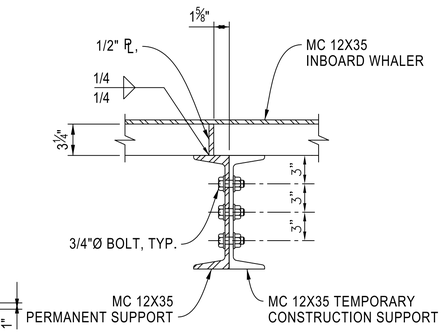

D7 SECTION DETAIL

SCALE: 1"= 1 1/2"

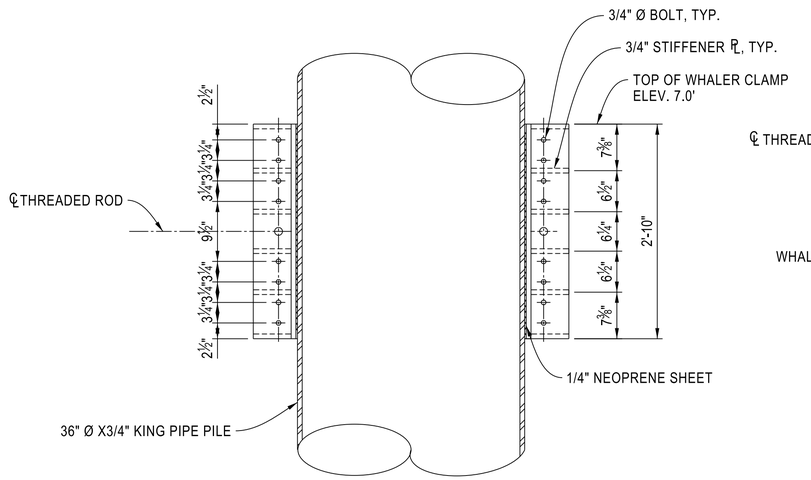

A2 SECTION DETAIL

SCALE: 1"= 1'

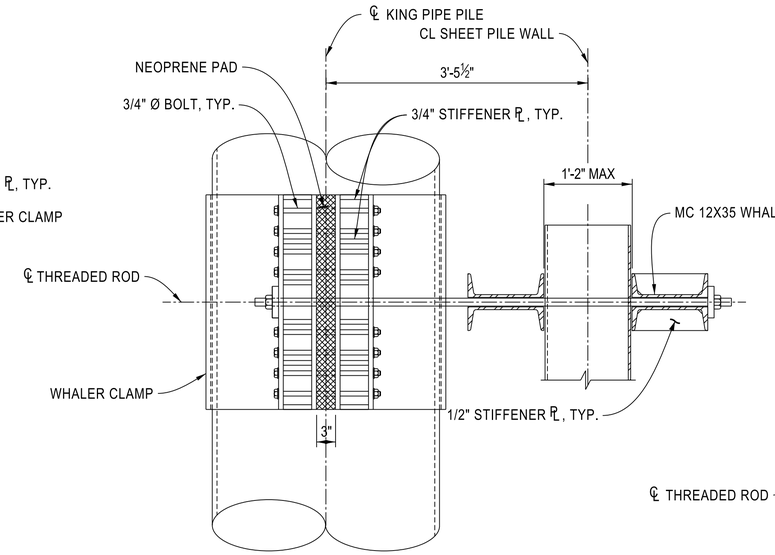

A4 SECTION DETAIL

SCALE: 1"= 1'

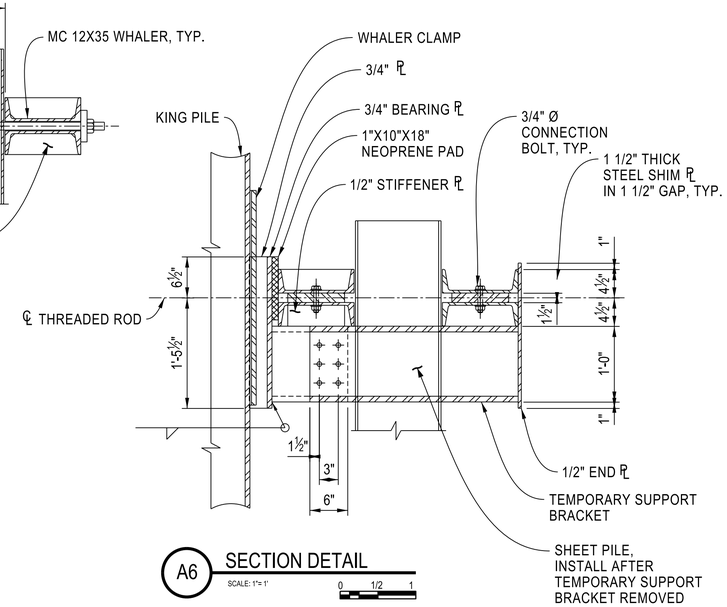

A6 SECTION DETAIL

SCALE: 1"= 1'

STATE OF CALIFORNIA
CALIFORNIA NATURAL RESOURCES AGENCY
DEPARTMENT OF WATER RESOURCES
DIVISION OF ENGINEERING
STATE WATER FACILITIES

REV.	DESCRIPTION	SUB.	APP.

REGISTERED PROFESSIONAL ENGINEER STATE OF CALIFORNIA

DESIGNED: CHECKED:
DRAWN: REVIEWED:
SUBMITTED:
APPROVAL RECOMMENDED: DATE:
APPROVED: DATE:

THINK SAFETY - ACT SAFELY

STATE WATER FACILITIES
DROUGHT EMERGENCY

TEMPORARY ROCK BARRIER
2015

WEST FALSE RIVER

WEST FALSE RIVER

DETAILS 2

SPEC. NO.	SHEET NO.	REVISION	DRAWING NO.
15-04	006		C-205

VI= Plot.BW.22x34.PEN
4/13/2015